E-rentals

Rental Repair Sale



E Rentals

INDUSTRIAL EQUIPMENT RENTAL

E-rentals

COMPANY PROFILE

Reliable Solutions for Construction & Logistics

E-Rentals has been a trusted provider of industrial equipment rentals for over 20 years, having been founded in 2003. The company has since evolved from its original brand, “E-forklit,” to its current identity, “E-Rentals,” reflecting an expanded offering that now extends beyond forklifts to a full digital operations platform for industrial equipment. Today, E-Rentals delivers comprehensive solutions that span rental services, full-scale maintenance, remanufacturing, digital monitoring, asset custody, and financing—providing end-to-end support for its clients’ operational needs.

E-Rentals operates a nationwide network of service locations, each covering a radius of over 50 km. In key cities, the company has established specialized remanufacturing facilities to ensure a consistently high-quality and standardized rental experience for industrial equipment. This infrastructure also supports comprehensive and diversified asset management solutions, all built on the same foundation of quality and reliability.



2 Hours RENTALS INDUSTRIAL EQUIPMENT

Forklift Rental

Product R&D

Parts Repair

Purchase & Sale

rentals

800+
Project Cases

3000+
Target Clients

ENTERPRISE QUALIFICATIONS & CERTIFICATIONS







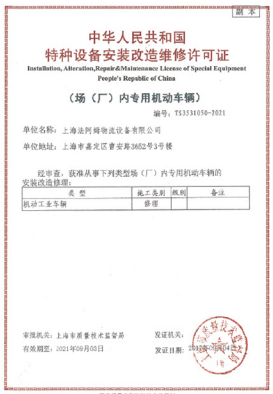



ISO Quality Management System Certification– ensuring consistent operational excellence and reliability.

Certified Standardized Safety Production Enterprise– adhering to rigorous national safety standards in all operations.

Special Equipment Installation & Modification License– authorized to perform professional installation and modification of industrial equipment.

Jiangsu Province AAA Quality Credit Enterprise– recognized as a top-tier enterprise for outstanding credit and quality integrity.

Jiangsu Province Private Science & Technology Enterprise– certified as an innovative technology-driven company within the private sector.



rentals

CONTENTS

1 电动托盘搬运车（CBD）
Electric Pallet Truck（CBD)

CBD15-Z 001-002



CBD15/20-ZLi 003-004



CBD15/20-ZLi-S 005-006



CBD15/20-TLi 007-008



CBD15-170HA 009-010



CBD30-170HA（越野） 011-012



CBD30-170HB（越野） 013-014



CBD15/20-Y 015-016



CBD15/20-YLi 017-018



CBD15/20-YZ 019-020



CBD20-150G（Li） 021-022



CBD18/20-180(Li) 023-024



2 电动托盘搬运车（CBD）
Electric Pallet Truck（CBD）

CBD20/25/30-460 025-026



CBD20/25/30-URD(461) 027-028



CBD40/50-460 029-030



CBD20/25/30-470 031-032



CBD20/25/30-VRD(471) 033-034



CBD20-490 035-036



CBD20/25-UGD(491) 037-038



CBD35-510/520/530 039-040



CBD40/45/50-510/520 041-042



rentals

CONTENTS

3 平衡重电动托盘堆高车（CPD）
Counterbalance Electric Pallet Stacker（CPD）

CPD06-970 063-064



CPD12-910/970/CPD16-D970/970 065-066



4 插腿式电动托盘堆高车（CTD）
Straddle Electric Pallet Stacker（CTD）

CTD10-050 067-068



CTD10-090 069-070



CTD14-920/CTD16-D920/960/360 071-072



CTD16-960H 073-074



CTD20-Y 075-076



rentals

CONTENTS

5 前移式电动托盘堆高车（CQD）
Reach Electric Pallet Stacker（CQD）

CQDM12/15-810 077-078



CQDM16/20-810 079-080



CQDH13/14-850 081-082



CQDH16-851 083-084



CQD16-US(Li) 085-086



6 电动牵引车（QYD）
Electric Tow Tractor（QYD）

QYD30/35/40/45-480 087-088



QYD30-460Q 089-090



rentals

CONTENTS

7 电动拣选车（OPD）
Electric Order Picker（OPD）

OPD20/25-UGD（581） 091-092



JXO-CE 093-094



8 手动液压搬运车
Manual Hydraulic Pallet Truck

SDYY-BYC 095-096



E-rentals

www.e-rentals.cn

CBD15-Z

LITHIUM BATTERY PALLET TRUCK

电动托盘搬运车

LEAD ACID



产品性能特点: 整车简洁灵巧,适合狭窄空间作业;永磁驱动电机,结构简单,免维护;动力强劲,爬坡轻松;标配急停开关、紧急反向安全装置及内置充电器;多功能手柄,集成钥匙开关,标配直立行走按钮,龟速按钮,操作简单舒适;金属罩壳-高强度,耐撞击。

CHARACTERISTICS: The whole vehicle is simple and agile, suitable for working in narrow spaces; Permanent magnet drive motor, simple structure, maintenance free; Strong power, easy climbing; Standard emergency stop switch, emergency reverse safety device, and built-in charger; Multi functional handle, integrated key switch, standard upright walking button, turtle speed button, easy and comfortable operation; Metal casing - high strength, impact resistant.

舒适·节能 COMFORT AND ENERGY SAVING | 稳定·可靠 STABLE AND RELIABLE | 智能·安全 INTELLIGENT SECURITY | 维修便捷 CONVENIENT MAINTENANCE

CBD15-Z

	特性	Feature	单位	
1.01	型号	Model		CBD15-Z
1.02	操作类型	Operating type		步行式 Walkie
1.03	额定载重	Load capacity	kg	1500
1.04	载荷中心距	Load center	mm	600
1.05	轴距	Wheel base	mm	1220
	车轮	Wheels		
2.01	轮子类型(前/后)	Wheels type		PU
2.02	驱动轮/承重轮数量	Wheel quantity Driving wheel/Bearing wheel		1/4
2.03	驱动轮尺寸	Driving wheel size	mm	Φ210×70
2.04	承重轮尺寸	Bearing wheel size	mm	Φ80×60
	尺寸	Dimension		
3.01	货叉最低离地高度	Min.fork lowered height	mm	80
3.02	货叉最大起升高度	Max.fork lifting height	mm	200
3.03	最大起升行程	Max.lifting height	mm	120
3.04	货叉外侧间距	Outside width between forks	mm	550/685
3.05	货叉内侧间距	Inside width between forks	mm	240/375
3.06	货叉长度	Fork length	mm	1150/1200
3.07	货叉宽度	Fork width	mm	155
3.08	货叉厚度	Fork thickness	mm	55
3.09	整车全长	Overall length	mm	1678/1628
3.10	车体宽度	Overall width	mm	685
3.11	整车高度（含手柄）	Overall height(With handle)	mm	1254
3.12	整车高度（不含手柄）	Overall height(Without handle)	mm	613
3.13	最小转弯半径	Min.Turning radius	mm	1388/1438
3.14	最小直角堆垛通道宽度 (托盘800×1200, 1200沿货叉放置)	Min.Aisle width for pallets 800×1200	mm	1982
3.15	最小直角堆垛通道宽度 (托盘1000×1200, 1200沿货叉放置)	Min.Aisle width for pallets 1000×1200	mm	2065
	性能	Performance		
4.01	最大行驶速度，满载/空载	Travel speed,laden/unladen	km/h	4.2/4.7
4.02	最大起升速度，满载/空载	Lift speed,laden/unladen	mm/s	31/40
4.03	最大下降速度，满载/空载	Lowering speed,laden/unladen	mm/s	51/53
4.04	爬坡度，满载/空载	Gradeability,laden/unladen	%	6/16
	电气配置	Electrical configuration		
5.01	驱动电机/起升电机	Drive motor/ Lift motor	KW	DC0.75KW/DC0.6KW
5.02	蓄电池电压/容量	Battery voltage / capacity	V/Ah	24V/75Ah
5.03	蓄电池电压/容量	Charger specification	V/A	24V/8A
5.04	控制器型号	Controller		大能
	重量	Weight		
6.01	蓄电池重量	Battery weight	kg	2×10
6.02	自重（包含蓄电池）	Service weight with battery	kg	190
	其他			
7.01	噪音水平	Noise level	dB(A)	≤70
7.02	转向类型	Steering type		机械转向 Mechanical
7.03	驱动类型	Drive control type		无刷直流

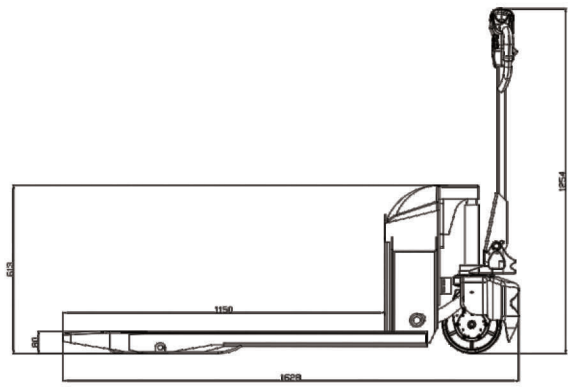

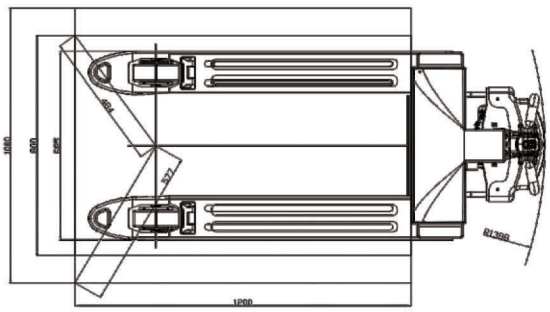

COMPANY CONTACT INFO
Website: www.e-rentals.cn
Address: 2837 Khalil Abu Al-Safa, 6976 Ar Rimal, Riyadh 13264

E-rentals

www.e-rentals.cn

CBD15/20 -ZLI

ELECTRIC STACKER

电动托盘搬运车

LEAD ACID



配置和性能:整车简洁灵巧，转弯半径小，自重轻，适合狭窄空间作业。手提式锰酸铁锂电池,充电快,寿命长,免维护,更换便捷,续航无限。多功能手柄，集成钥匙开关，标配直立行走按钮，龟速按钮，操作简单舒适。永磁无刷驱动电机，免维护，效率高。动力强劲，爬坡轻松。金属罩壳-高强度，耐撞击，可延长使用寿命。标配急停开关，紧急反向安全装置。

舒适·节能 COMFORT AND ENERGY SAVING

稳定·可靠 STABLE AND RELIABLE

智能·安全 INTELLIGENT SECURITY

维修便捷 CONVENIENT MAINTENANCE

CBD15/20 -ZLI

	特性	Feature	单位	
1.1	型号	Model		CBD15/20-ZLi
1.2	操作类型	Operating type		步行式 Walkie
1.3	额定载重	Load capacity	kg	1500/2000
1.4	载荷中心距	Load center	mm	600
1.5	轴距	Wheel base	mm	1175/1225
	车轮	Wheels		
2.1	轮子类型(前/后)	Wheels type		PU
2.2	驱动轮/承重轮数量	Wheel quantity Driving wheel/Bearing wheel		1/双轮4(单轮2)
2.3	驱动轮尺寸	Driving wheel size	mm	Φ150×55
2.4	承重轮尺寸	Bearing wheel size	mm	双轮Φ80×70(单轮Φ80×93)
	尺寸	Dimension		
3.1	货叉最低离地高度	Min.fork lowered height	mm	85
3.2	货叉最大起升高度	Max.fork lifting height	mm	200
3.3	最大起升行程	Max.lifting height	mm	115
3.4	货叉外侧间距	Outside width between forks	mm	550/685
3.5	货叉内侧间距	Inside width between forks	mm	230/365
3.6	货叉长度	Fork length	mm	1150/1200
3.7	货叉宽度 Fork width	Fork width	mm	160
3.8	货叉厚度 Fork thickness	Fork thickness	mm	55
3.9	整车全长 Overall length	Overall length	mm	1587/1637
3.10	车体宽度 Overall width	Overall width	mm	550/685
3.11	整车高度(含手柄)	Overall height(With handle)	mm	1255
3.12	整车高度(不含手柄)	Overall height(Without handle)	mm	750
3.13	最小转弯半径	Min.Turning radius	mm	1345/1395
3.14	最小直角堆垛通道宽度(托盘800×1200,1200沿货叉放置)	Min.Aisle width for pallets 800×1200	mm	1843
3.15	最小直角堆垛通道宽度(托盘1000×1200,1200沿货叉放置)	Min.Aisle width for pallets 1000×1200	mm	1925
	性能	Performance		
4.1	最大行驶速度,满载/空载	Travel speed,laden/unladen	km/h	4/4.5
4.2	最大起升速度,满载/空载	Lift speed,laden/unladen	mm/s	30/35
4.3	最大下降速度,满载/空载	Lowering speed,laden/unladen	mm/s	35/25
4.4	爬坡度,满载/空载	Gradeability,laden/unladen	%	8/20
	电气配置	Electrical configuration		
5.1	驱动电机/起升电机	Drive motor/ Lift motor	KW	DC0.75(DC1)/DC0.6(DC0.8)
5.2	蓄电池电压/容量	Battery voltage / capacity	V/Ah	48V/10Ah(48V/15Ah)
5.3	充电器规格	Charger specification	V/A	48V/3A(48V5A)
5.4	控制器型号	Controller		DS1000
	重量	Weight		
6.1	蓄电池重量	Battery weight	kg	7
6.2	自重(包含蓄电池)	Service weight with battery	kg	130
	其他	Others		
7.1	噪音水平	Noise level	dB(A)	≤70
7.2	转向类型	Steering type		机械转向 Mechanical
7.3	驱动类型	Drive control type		无刷直流

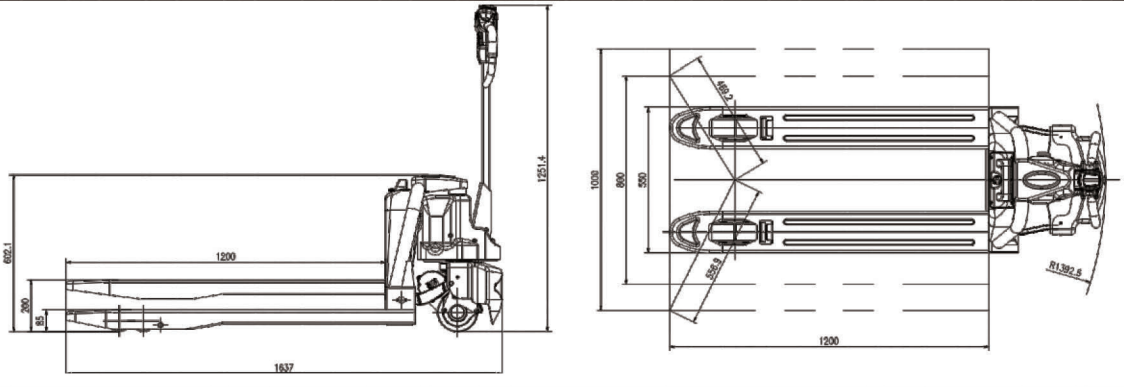

COMPANY CONTACT INFO
Website: www.e-rentals.cn
Address: 2837 Khalil Abu Al-Safa, 6976 Ar Rimal, Riyadh 13264

E-rentals

www.e-rentals.cn

CBD15/20 -ZLi-S

ELECTRIC STACKER

电动托盘搬运车

LEAD ACID



配置和性能:整车简洁灵巧，转弯半径小，自重轻，适合狭窄空间作业。手提式锰酸铁锂电池,充电快,寿命长,免维护,更换便捷,续航无限。多功能手柄，集成钥匙开关，标配直立行走按钮，龟速按钮，操作简单舒适。永磁无刷驱动电机，免维护，效率高。动力强劲，爬坡轻松。金属罩壳-高强度，耐撞击，可延长使用寿命。标配急停开关，紧急反向安全装置。造型新颖，外观厚实大方。

舒适·节能 COMFORT AND ENERGY SAVING

稳定·可靠 STABLE AND RELIABLE

智能·安全 INTELLIGENT SECURITY

维修便捷 CONVENIENT MAINTENANCE

CBD15/20 -ZLi-S

	特性	Feature	单位	
1.1	型号	Model		CBD15/20-ZLi-S
1.2	操作类型	Operating type		步行式 Walkie
1.3	额定载重	Load capacity	kg	1500/2000
1.4	载荷中心距	Load center	mm	600
1.5	轴距	Wheel base	mm	1173/1223
	车轮	Wheels		
2.1	轮子类型(前/后)	Wheels type		PU
2.2	驱动轮/承重轮数量	Wheel quantity Driving wheel/Bearing wheel		1/双轮4(单轮2)
2.3	驱动轮尺寸	Driving wheel size	mm	Φ150×55
2.4	承重轮尺寸	Bearing wheel size	mm	双轮Φ80×70(单轮Φ80×93)
	尺寸	Dimension		
3.1	货叉最低离地高度	Min.fork lowered height	mm	85
3.2	货叉最大起升高度	Max.fork lifting height	mm	200
3.3	最大起升行程	Max.lifting height	mm	115
3.4	货叉外侧间距	Outside width between forks	mm	550/685
3.5	货叉内侧间距	Inside width between forks	mm	230/365
3.6	货叉长度	Fork length	mm	1150/1200
3.7	货叉宽度	Fork width	mm	160
3.8	货叉厚度	Fork thickness	mm	55
3.9	整车全长	Overall length	mm	1572/1622
3.10	车体宽度	Overall width	mm	550/685
3.11	整车高度(含手柄)	Overall height(With handle)	mm	1255
3.12	整车高度(不含手柄)	Overall height(Without handle)	mm	750
3.13	最小转弯半径	Min.Turning radius	mm	1340/1390
3.14	最小直角堆垛通道宽度(托盘800×1200,1200沿货叉放置)	Min.Aisle width for pallets 800×1200	mm	1900
3.15	最小直角堆垛通道宽度(托盘1000×1200,1200沿货叉放置)	Min.Aisle width for pallets 1000×1200	mm	1990
	性能	Performance		
4.1	最大行驶速度,满载/空载	Travel speed,laden/unladen	km/h	4/4.5
4.2	最大起升速度,满载/空载	Lift speed,laden/unladen	mm/s	30/35
4.3	最大下降速度,满载/空载	Lowering speed,laden/unladen	mm/s	35/25
4.4	爬坡度,满载/空载	Gradeability,laden/unladen	%	8/20
	电气配置	Electrical configuration		
5.1	驱动电机/起升电机	Drive motor/ Lift motor	KW	DC0.75/DC0.6(DC1/DC0.6)
5.2	蓄电池电压/容量	Battery voltage / capacity	V/Ah	48V/10Ah(48V/15Ah)
5.3	充电器规格	Charger specification	V/A	48V/3A(48V5A)
5.4	控制器型号	Controller		DS1000
	重量	Weight		
6.1	蓄电池重量	Battery weight	kg	6
6.2	自重(包含蓄电池)	Service weight with battery	kg	127
	其他	Others		
7.1	噪音水平	Noise level	dB(A)	≤70
7.2	转向类型	Steering type		机械转向 Mechanical
7.3	驱动类型	Drive control type		无刷直流

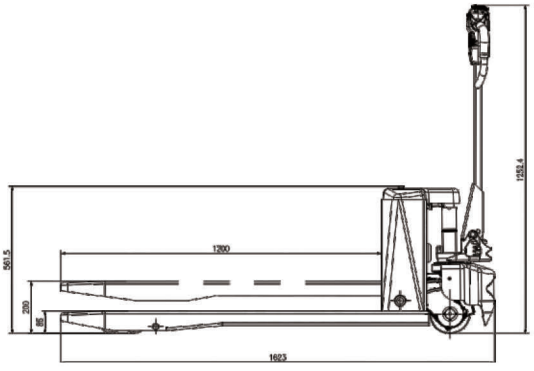

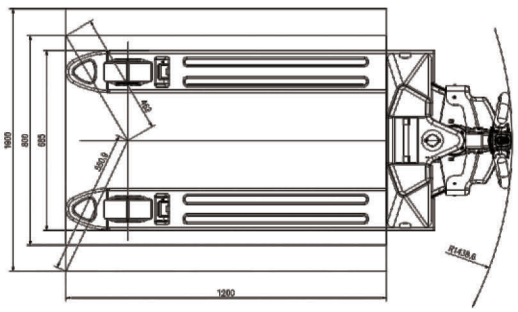

COMPANY CONTACT INFO
Website: www.e-rentals.cn
Address: 2837 Khalil Abu Al-Safa, 6976 Ar Rimal, Riyadh 13264

E-rentals

CBD15 20-TLi

锂电池托盘搬运车 Lithium Battery Pallet Truck



产品性能特点

- 手提式磷酸铁锂电池包，充电快，寿命长，免维护，更换便捷，续航无限；
- 整车简洁灵巧，转弯半径小，自重轻，适用于狭窄通道作业；
- 货叉最低离地高度80mm，适合双面托盘；
- 多功能手柄，集成钥匙开关，标配直立行走按钮，龟速按钮，操作简单舒适；
- 永磁无刷驱动电机，免维护，效率高；
- 动力强劲，爬坡轻松。

Characteristics:

- Hand-held LFP model lithium battery makes battery changing easier and more convenient,fast charging and efficient.
- Compact and flexible,small turning radius,light weight,suitable for narrow aisle operations.
- Min. Fork lowered height: 80mm,fit for double-deck pallet.
- Multi-function Handle, integrating key switch,upright walking button,turtle speed button,which is simple and comfortable for operation.
- Brushless drive motor, maintenance free,high efficiency.
- Powerful,strong climbing ability.

锂电池动力
LITHIUM BATTERY POWER

CBD15 20-TLi

制造商和技术参数 Manufacturer's Data and Design Characteristics

	特性	Feature	单位				
1.01	型号	Model		CBD15-TLi			CBD20-TLi
1.02	操作类型	Operating type		步行式 Pedestrian			步行式 Pedestrian
1.03	额定载重	Load capacity	kg	1500			2000
1.04	载荷中心距	Load center	mm	600			
1.05	轴距	Wheel base	mm	1163/1213			
	车轮	Wheels					
2.01	轮子类型	Wheels type		聚氨酯 PU			
2.02	驱动轮，平衡轮/承载轮数量 (x=驱动轮)	Wheel quantity no. (x=driven) front/rear		1x+2/4			
2.03	驱动轮尺寸	Driving wheel size	mm	Φ190×70			
2.04	承载轮尺寸	Bearing wheel size	mm	Φ79×62			
	尺寸	Dimensions					
3.01	货叉最低离地高度	Min.fork lowered height	mm	80			
3.02	货叉最大起升高度	Max.fork lifting height	mm	195			
3.03	最大起升行程	Max.lifting height	mm	115			
3.04	货叉外侧间距	Outside width between forks	mm	560/685			
3.05	货叉内侧间距	Inside width between forks	mm	250/375			
3.06	货叉长度	Fork length	mm	1150/1200			
3.07	货叉宽度	Fork width	mm	155			
3.08	货叉厚度	Fork thickness	mm	55			
3.09	整车全长	Overall length	mm	1615/1665			
3.10	车体宽度	Overall width	mm	560/685			
3.11	整车高度 (含手柄)	Overall height(With handle)	mm	1265			
3.12	整车高度 (不含手柄)	Overall height(Without handle)	mm	590			
3.13	最小转弯半径	Min.Turning radius	mm	1374/1425			
3.14	最小直角堆垛通道宽度 (托盘800×1200，1200沿货叉放置)	Min.Aisle width for pallets 800×1200	mm	2068/2089			
3.15	最小直角堆垛通道宽度 (托盘1000×1200，1200沿货叉放置)	Min.Aisle width for pallets 1000×1200	mm	2153/2180			
	性能	erformance					
4.01	最大行驶速度，满载/空载	Travel speed,laden/unladen	km/h	4.5/4.5			
4.02	最大起升速度，满载/空载	Lift speed,laden/unladen	mm/s	35/40			
4.03	最大下降速度，满载/空载	Lowering speed,laden/unladen	mm/s	40/25			
4.04	爬坡度，满载/空载	Gradeability,laden/unladen	%	10/20			6/16
4.05	制动类型	Service brake type		电磁制动 Electric			
	电气配置	Electrical configuration					
5.01	驱动电机额定功率S2 60分钟	Traction motor rating at S2 60 min	kW	BLDC 0.8			BLDC 1.0
5.02	起升电机额定功率S3 15%	Lift motor rating at S3 15%	kW	DC 0.5			DC 0.8
5.03	蓄电池电压/标称容量	Battery voltage / capacity	V/Ah	48/10	48/15(选配Optional)	48/20(选配Optional)	48/20
5.04	充电器规格	Charger specification	V/A	48/5		48/10(选配Optional)	48/10
	重量	Weight					
6.01	蓄电池重量 (±5%) Battery weight (±5%)	Battery weight (±5%)	kg	6.7	9	9	9
6.02	自重 (包含蓄电池,560*1150) Service weight with battery	Service weight with battery	kg	130.7	133	133	137
	其他	Others					
7.01	转向类型	Steering type		机械转向 Mechanical			
7.02	驱动控类型	Drive control type		永磁无刷控制 BLDC			

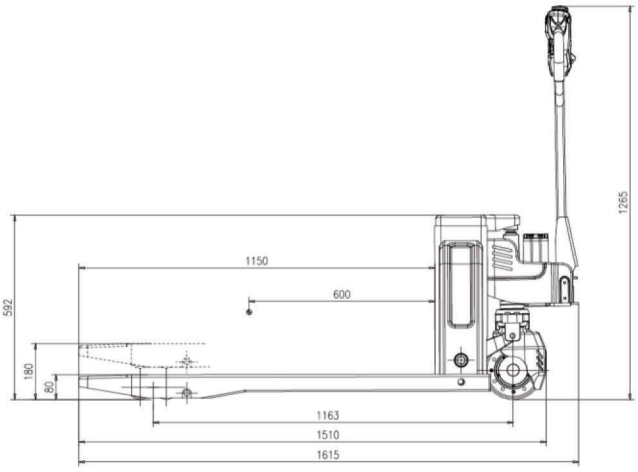

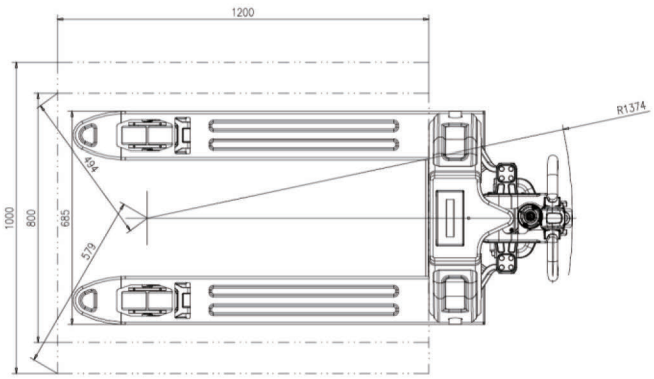

COMPANY CONTACT INFO
Website: www.e-rentals.cn
Address: 2837 Khalil Abu Al-Safa, 6976 Ar Rimal, Riyadh 13264

E-rentals

www.e-rentals.cn

CBD15-170HA

电动托盘搬运车 Electric pallet truck



产品性能特点：

- 整车简洁灵巧，适合狭窄空间作业
- 永磁驱动电机，结构简单，免维护
- 动力强劲，爬坡轻松；
- 电池开放式布局，更换便捷；
- 手柄和油缸分离，转向轻盈；
- 标配急停开关、紧急反向安全装置及内置充电器；
- 多功能手柄，集钥匙、直立行走开关、液晶屏(电池电量、工作时间、故障显示)，选配密码锁、龟速、操作简单舒适；
- 低噪音、低耗能，每天仅需2度电；
- 金属罩壳-高强度，耐撞击；
- 可选装平衡轮，提高行车稳定性。

产品性能特点：

- The vehicle is compact and nimble, suitable for operations in narrow spaces.
- Permanent magnet drive motor, simple structure, maintenance-free
- Powerful performance, easy climbing；
- The battery has an open layout, making replacement convenient.；
- The handle and cylinder are separate, resulting in light steering.；
- Standard features include an emergency stop switch, an emergency reverse safety device, and a built-in charger.；
- Multifunctional handle, integrating key, upright walking switch, LCD screen (battery level, working time, fault display), optional password lock, turtle speed, simple and comfortable operation.；
- Low noise, low energy consumption, only 2 kWh per day；
- Metal housing - high strength, impact-resistant；
- Optional balance wheel, improves driving stability。

充电快速 FAST AND CHARGING | 稳定·可靠 STABLE AND RELIABLE | 简洁·灵巧 SIMPLE AND DEXTEROUS | 维修便捷 CONVENIENT MAINTENANCE

CBD15 -170HA

特性 Feature					
型号 Model	—	CBD15			
配置号 Configuration No.	—	170HA	170HALi		
额定载重 Load capacity	kg	1500			
载荷中心距 Load center	mm	600			
轴距 Wheel base	mm	1325			
操作类型 Operating type	—	步行式 Walkie			
车轮 Wheels					
轮子类型（前/后）Wheels type	—	聚氨酯 PU			
驱动轮/平衡轮/承重轮数量 Wheel quantity Driving wheel/Balance wheel/Bearing wheel	—	1X+2/4			
驱动轮尺寸 Driving wheel size	mm	Φ210×70			
平衡轮尺寸 Balance wheel size	mm	Φ70×30			
承重轮尺寸 Bearing wheel size	mm	Φ84×70			
尺寸 Dimension					
货叉最低离地高度 Min.fork lowered height	mm	85			
货叉最大起升高度 Max.fork lifting height	mm	205			
最大起升行程 Max.lifting height	mm	120			
货叉外侧间距 Outside width between forks	mm	550/685			
货叉内侧间距 Inside width between forks	mm	230/365			
货叉长度 Fork length	mm	1150/1200			
货叉宽度 Fork width	mm	160			
货叉厚度 Fork thickness	mm	55			
整车全长 Overall length	mm	1730			
车体宽度 Overall width	mm	698			
整车高度（含手柄）Overall height(With handle)	mm	1225			
整车高度（不含手柄）Overall height(Without handle)	mm	648			
最小转弯半径 Min.Turning radius	mm	1510			
最小直角堆垛通道宽度（托盘800×1200，1200沿货叉放置） Min.Aisle width for pallets 800×1200	mm	1835			
最小直角堆垛通道宽度（托盘1000×1200，1200沿货叉放置） Min.Aisle width for pallets 1000×1200	mm	1865			
性能 Performance					
最大行驶速度，满载/空载 Travel speed,laden/unladen	km/h	4/4.5			
最大起升速度，满载/空载 Lift speed,laden/unladen	mm/s	35/40			
最大下降速度，满载/空载 Lowering speed,laden/unladen	mm/s	65/60			
爬坡度，满载/空载 Gradeability,laden/unladen	%	10/20			
电气配置 Electrical configuration					
驱动电机 Drive motor	kW	DC 0.63			
起升电机 Lift motor	kW	DC 0.8			
蓄电池电压/容量 Battery voltage/capacity	V/Ah	24/85	24/50	24/60	24/100
充电器规格 Charger specification	V/Ah	24/10	24/20	选配	选配
重量 Weight					
蓄电池重量 Battery weight	kg	2×24	9	2×8	2×9
自重（包含蓄电池）Service weight with battery	kg	232	193	200	302

*本公司保留更改产品设计和规格的权利，恕不另行通知。

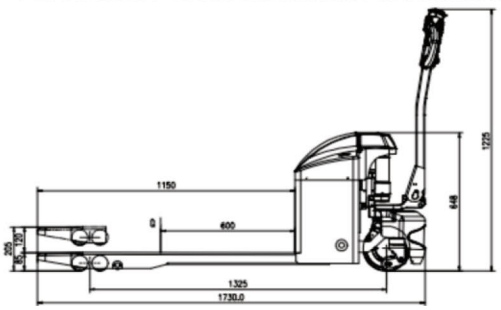

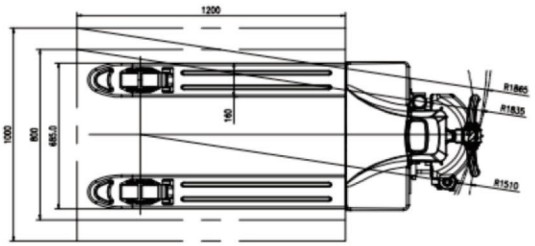

COMPANY CONTACT INFO
Website: www.e-rentals.cn
Address: 2837 Khalil Abu Al-Safa, 6976 Ar Rimal, Riyadh 13264

E-rentals

www.e-rentals.cn

CBD30 -170HA

ELECTRIC PALLET TRUCK

电动托盘搬运车

LEAD ACID

越野小坦克
不惧挑战！
适用于工地、冷库等复杂环境





300mm大直径越野轮

产品性能特点: 整车简洁灵巧，适合狭窄空间作业。标配急停开关，紧急反向安全装置、内置充电器。多功能手柄，集成钥匙开关、直立行走按钮、液晶屏（电池电量、工作时间、故障显示），选配密码锁、龟速，操作简单舒适。金属罩壳-高强度，耐撞击。标配尼龙承重轮，越野更耐用。全密封设计，满足作业需求。适合于多种环境下使用，复杂工况通过性更强。

CHARACTERISTICS: Compact and flexible,suitable for narrow place operations. Standard configuration of emergency stop switch,emergency reverse safety device and built-in charger. Multifunction handle,key,upright walking,LCD screen(can display battery,working time,fault code),Optional intergrated combination lock and turtle climbing,contributes to easy and comfortable operation. Metal shell-High strength,safer. Standard nylon load-bearing wheels, more durable in off-road condition. Fully sealed design, meets operational requirements. Adaptable to a variety of environments,stronger passability in complex conditions. Standard nylon load-bearing wheels, more durable in off-road condition. Fully sealed design, meets operational requirements. Adaptable to a variety of environments,stronger passability in complex conditions.

舒适·节能 COMFORT AND ENERGY SAVING | 稳定·可靠 STABLE AND RELIABLE | 智能·安全 INTELLIGENT SECURITY | 维修便捷 CONVENIENT MAINTENANCE

CBD30-170HA

	特性	Feature	单位		
1.1	型号	Model		CBD30-170HA	
1.2	操作类型	Operating type		步行式 Pedestrian	
1.3	额定载重	Load capacity	kg	3000	
1.4	载荷中心距	Load center	mm	600	
1.5	轴距	Wheel base	mm	1380	
	车轮	Wheels			
2.1	轮子类型	Wheels type		驱动轮：橡胶 Driving:Rubber 承载轮：尼龙 Bearing:Nylon	
2.2	驱动轮/承载轮数量	Driving/Bearing		1X+0/4	
2.3	驱动轮尺寸	Driving wheel size	mm	φ300×110	
2.4	承载轮尺寸	Bearing wheel size	mm	φ84×80	
	尺寸	Dimension			
3.1	货叉最低离地高度	Min.fork lowered height	mm	85	
3.2	货叉最大起升高度	Max.fork lifting height	mm	205	
3.3	最大起升行程	Max.lifting height	mm	120	
3.4	货叉外侧间距	Outside width between forks	mm	560/685	
3.5	货叉长度	Fork length	mm	1150/1200	
3.6	货叉宽度	Fork width	mm	170	
3.7	货叉厚度	Fork thickness	mm	75	
3.8	整车全长	Overall length	mm	1723/1773	
3.9	车体宽度	Overall width	mm	697	
3.10	整车高度（含手柄）	Overall height(With handle)	mm	1382	
3.11	整车高度（不含手柄）	Overall height(Without handle)		838	
3.12	最小转弯半径	Min.Turning radius	mm	1578/1628	
3.13	最小直角堆垛通道宽度（托盘800×1200，1200沿货叉放置）	Min.Aisle width for pallets 800×1200	mm	1883/1933	
3.14	最小直角堆垛通道宽度（托盘1000×1200，1200沿货叉放置）	Min.Aisle width for pallets 1000×1200	mm	1911/1961	
	性能	Performance			
4.1	最大行驶速度，满载/空载	Travel speed,laden/unladen	km/h	3.5/4	
4.2	最大起升速度，满载/空载	Lift speed,laden/unladen	mm/s	17/23	
4.3	最大下降速度，满载/空载	Lowering speed,laden/unladen	mm/s	35/30	
4.4	爬坡度，满载/空载	Gradeability,laden/unladen	%	10/20	
4.5	制动类型	Service brake type		电磁制动 Electric	
	电气配置	Electrical configuration			
5.1	驱动电机额定功率S2 60分钟	Traction motor rating at S2 60 min	kW	BLDC 1.8	
5.2	起升电机额定功率S3 15%	Lift motor rating at S3 15%	kW	DC 0.8	
5.3	蓄电池电压/标称容量	Battery voltage / capacity	V/Ah	48/30 (VRLA)	48/65(选配 Optional)
5.4	充电器规格	Charger specification	V/A	48/5	48/10
	重量	Weight			
6.1	蓄电池重量（±5%）	Battery weight（±5%）	kg	9×4	15×4
6.2	自重（包含蓄电池）	Service weight with battery	kg	336	360
	其他	Others			
7.1	转向类型	Steering type		机械转向 Mechanical	
7.2	驱动控制器			永磁无刷控制 BLDC	

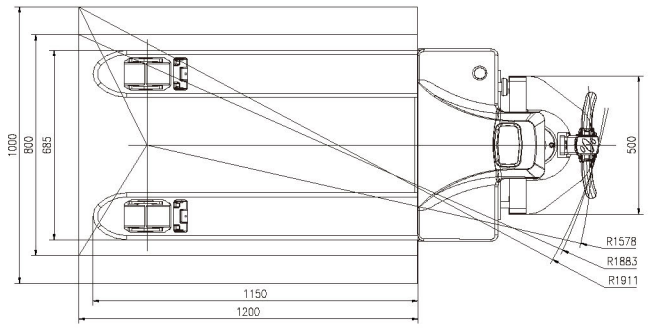

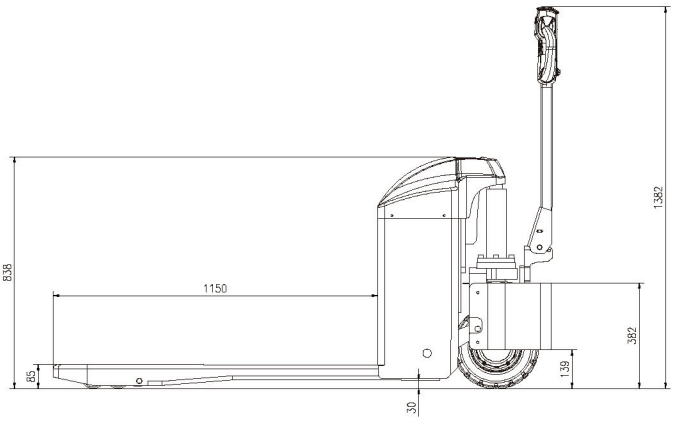

COMPANY CONTACT INFO
Website: www.e-rentals.cn
Address: 2837 Khalil Abu Al-Safa, 6976 Ar Rimal, Riyadh 13264

E-rentals

www.e-rentals.cn

CBD30 -170HB

ELECTRIC BATTERY PALLET TRUCK

电动托盘搬运车



产品性能特点: 整车简洁灵巧，适合狭窄空间作业。标配急停开关，紧急反向安全装置、外置充电器。多功能手柄，集成钥匙开关、直立行走按钮、液晶屏（电池电量、工作时间、故障显示）、龟速，操作简单舒适。金属罩壳-高强度，耐撞击，可延长使用寿命。全密封设计，满足作业需求。适合于多种环境下使用，简单工况通过性更强。可选配越野橡胶轮，提升越障能力，适用工地等复杂恶劣工况。结构强度高，承载能力强。

CHARACTERISTICS: The whole vehicle is simple and agile, suitable for operation in narrow spaces. It is equipped with a standard emergency stop switch, an emergency reverse safety device, and an external charger. The multi-functional handle integrates a key switch, a vertical walking button, a liquid crystal screen (displaying battery power, working time, and fault information), and a slow speed function, making operation simple and comfortable. The metal casing is of high strength, impact-resistant, and can extend the service life. The fully sealed design meets the operational requirements. It is suitable for use in various environments and has better passability in simple working conditions. It can be optionally equipped with off-road rubber wheels to enhance obstacle-crossing ability and is suitable for complex and harsh working conditions such as construction sites. The structure has high strength and strong load-bearing capacity.

充电快速 FAST AND CHARGING | 稳定·可靠 STABLE AND RELIABLE | 简洁·灵巧 SIMPLE AND DEXTEROUS | 维修便捷 CONVENIENT MAINTENANCE

CBD30 -170HB

	特性	Feature	单位unit	
1.01	型号	Model		CBD30-170HB
1.02	操作类型	Operating type		步行式 Walkie
1.03	额定载重	Load capacity	kg	3000
1.04	载荷中心距	Load center	mm	600
1.05	轴距	Wheel base	mm	1232
	车轮	Wheels		
2.01	轮子类型(前/后)	Wheels type		驱动轮Driving:PU 承重轮Bearing:PU
2.02	驱动轮/承重轮数量	Wheel quantity Driving wheel/Bearing wheel		1/4
2.03	驱动轮尺寸	Driving wheel size	mm	Φ250×85
2.04	承重轮尺寸	Bearing wheel size	mm	Φ84×80
	尺寸	Dimension		
3.01	货叉最低离地高度	Min.fork lowered height	mm	85
3.02	货叉最大起升高度	Max.fork lifting height	mm	205
3.03	最大起升行程	Max.lifting height	mm	120
3.04	货叉外侧间距	Outside width between forks	mm	550/685
3.05	货叉内侧间距	Inside width between forks	mm	240/375
3.06	货叉长度	Fork length	mm	1150/1200
3.07	货叉宽度	Fork width	mm	155
3.08	货叉厚度	Fork thickness	mm	55
3.09	整车全长	Overall length	mm	1722/1772
3.10	车体宽度	Overall width	mm	685
3.11	整车高度(含手柄)	Overall height(With handle)	mm	1235
3.12	整车高度(不含手柄)	Overall height(Without handle)	mm	711
3.13	最小转弯半径	Min.Turning radius	mm	1482/1532
3.14	最小直角堆垛通道宽度(托盘800×1200,1200沿货叉放置)	Min.Aisle width for pallets 800×1200	mm	2102
3.15	最小直角堆垛通道宽度(托盘1000×1200,1200沿货叉放置)	Min.Aisle width for pallets 1000×1200	mm	2190
	性能	Performance		
4.01	最大行驶速度,满载/空载	Travel speed,laden/unladen	km/h	3.6/4
4.02	最大起升速度,满载/空载	Lift speed,laden/unladen	mm/s	29/43
4.03	最大下降速度,满载/空载	Lowering speed,laden/unladen	mm/s	48/46
4.04	爬坡度,满载/空载	Gradeability,laden/unladen	%	8/20
	电气配置	Electrical configuration		
5.01	驱动电机/起升电机	Drive motor/ Lift motor	KW	BLDC 1.5/DC 0.8
5.02	蓄电池电压/容量	Battery voltage / capacity	V/Ah	48/30
5.03	充电器规格	Charger specification	V/A	48/5
5.04	控制器型号	Controller		大能 DALA
	重量	Weight		
6.01	蓄电池重量	Battery weight	kg	9×4
6.02	自重(包含蓄电池)	Service weight with battery	kg	240
	其他	Other		
7.01	噪音水平	Noise level	dB(A)	≤75
7.02	转向类型	Steering type		机械转向 Mechanical
7.03	驱动类型	Drive control type		永磁无刷

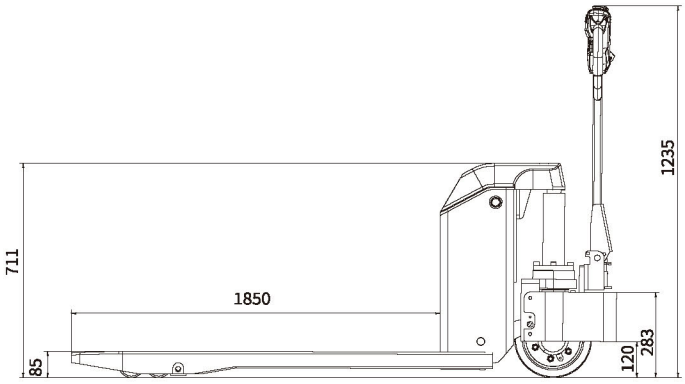

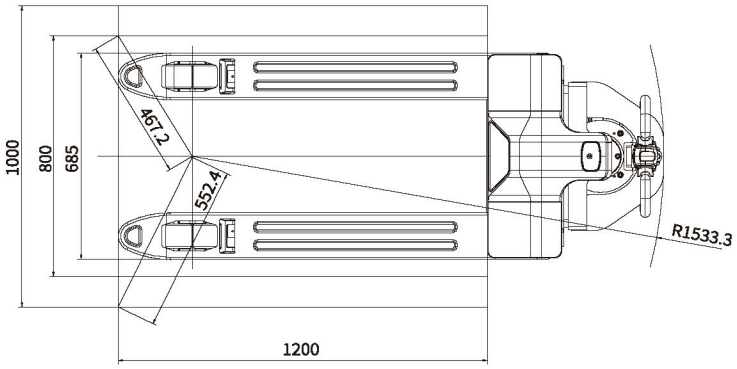

COMPANY CONTACT INFO
Website: www.e-rentals.cn
Address: 2837 Khalil Abu Al-Safa, 6976 Ar Rimal, Riyadh 13264

E-rentals

CBD15/20-Y

电动托盘搬运车 Electric pallet truck



产品性能特点：

- 整车简洁灵巧，适合狭窄空间作业；
- 可配免维护铅酸电池和磷铁锂电池，满载爬坡10%大功率控制器；
- 手柄和油缸分离，转向轻盈；
- 标配急停开关，紧急反向安全装置、外置充电器；
- 多功能手柄，集成钥匙开关、直立行走按钮、液晶屏（电池电量、工作时间、故障显示），选配密码锁、龟速，操作简单舒适；
- 可翻盖式金属罩壳，坚固耐用、方便维修；
- 可选装平衡轮，提高行车稳定性。

Characteristics:

- Compact and flexible,suitable for narrow place operations;
- Can be equipped with maintenance-free lead-acid batteries or lithium iron phosphate batteries, and a high-power controller capable of fully loaded climbing at 10% grade;
- The handle is separated from the oilcylinder and the steering is light;
- Standard configuration of emergency stop switch,emergency reverse safety device and external charger;
- Multifunction handle,key,upright walking, LCD screen(can display battery,working time,fault code)Optional intergrated combination lock and turtle climbing,contributes to easy and comfortable operation;
- Clamshell type metal housing,strong and durable, make the maintenance easier;
- Balance wheels can be installed on both sides to improve running stability.

CBD15/20-Y

制造商和技术参数 Manufacturer' s Data and Design Characteristics

	特性	Feature	单位						
1.01	型号	Model		CBD15-Y			CBD20-Y		
1.02	操作类型	Operating type		步行式 Walkie					
1.03	额定载重	Load capacity	kg	1500			2000		
1.04	载荷中心距	Load center	mm	600					
1.05	轴距	Wheel base	mm	1288					
	车轮	Wheels							
2.01	轮子类型	Wheels type		聚氨酯 PU					
2.02	驱动轮/平衡轮/承载轮数量	Wheel quantity Driving wheel/Balance wheel/Bearing wheel		1/2/4					
2.03	驱动轮尺寸	Driving wheel size	mm	Φ210X70					
2.04	承载轮尺寸	Bearing wheel size	mm	Φ84×70					
2.05	平衡轮尺寸	Balance wheel size	mm	Φ70×30 (选配Optional)					
	尺寸	Dimension							
3.01	货叉最低离地高度	Min.fork lowered height	mm	85±3					
3.02	货叉最大起升高度	Max.fork lifting height	mm	205					
3.03	最大起升行程	Max.lifting height	mm	120					
3.04	货叉外侧间距	Outside width between forks	mm	560/685					
3.05	货叉内侧间距	Inside width between forks	mm	250/375					
3.06	货叉长度	Fork length	mm	1150/1200					
3.07	货叉宽度	Fork width	mm	155					
3.08	货叉厚度	Fork thickness	mm	75					
3.09	整车全长	Overall length	mm	1700/1750					
3.10	车体宽度	Overall width	mm	677					
3.11	整车高度(含手柄)	Overall height(With handle)	mm	1245					
3.12	整车高度(不含手柄)	Overall height(Without handle)	mm	615					
3.13	最小转弯半径	Min.Turning radius	mm	1441/1491					
3.14	最小直角堆垛通道宽度(托盘800×1200,1200沿货叉放置)	Min.Aisle width for pallets 800×1200	mm	1794/1844					
3.15	最小直角堆垛通道宽度(托盘1000×1200,1200沿货叉放置)	Min.Aisle width for pallets 1000×1200	mm	1828/1878					
	性能	Performance							
4.01	最大行驶速度,满载/空载	Travel speed,laden/unladen	km/h	4/4.5					
4.02	最大起升速度,满载/空载	Lift speed,laden/unladen	mm/s	35/40					
4.03	最大下降速度,满载/空载	Lowering speed,laden/unladen	mm/s	65/60					
4.04	爬坡度,满载/空载	Gradeability,laden/unladen	%	6/16					
4.05	制动类型	Service brake type		电磁制动 Electric					
	电气配置	Electrical configuration							
5.01	驱动电机额定功率S2 60分钟	Traction motor rating at S2 60 min	kW	DC 0.75			DC 0.9		
5.02	起升电机额定功率S3 15%	Lift motor rating at S3 15%	kW	DC 0.8					
5.03	蓄电池电压/标称容量	Battery voltage / capacity	V/Ah	2X12/85 (VRLA)	24/25 (LFP)	24/30 (LFP)	2X12/85 (VRLA)	24/25 (LFP)	24/30 (LFP)
5.04	充电器规格	Charger specification	V/A	24/10	24/10		24/10	24/10	
	重量	Weight							
6.01	蓄电池重量(±5%)	Battery weight(±5%)	kg	2X24	7.5	10	2X24	7.5	10
6.02	自重(包含蓄电池)	Service weight with battery	kg	203	163	166	211	171	174
	其他	Others							
7.01	噪音等级	Sound level	dB(A)	≤75					
7.02	转向类型	Steering type		机械转向 Mechanical					
7.03	驱动控类型	Drive control type		直流控制 DC					

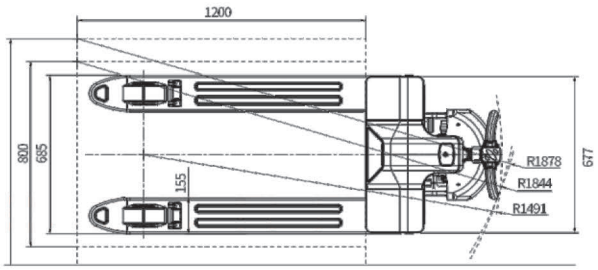

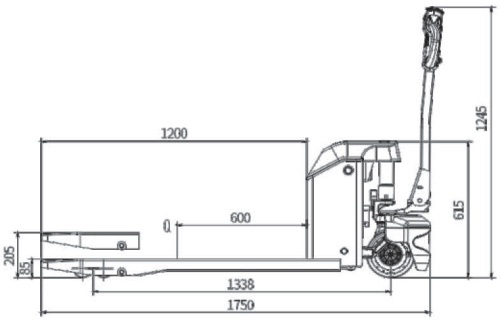

COMPANY CONTACT INFO
Website: www.e-rentals.cn
Address: 2837 Khalil Abu Al-Safa, 6976 Ar Rimal, Riyadh 13264

E-rentals

www.e-rentals.cn

CBD15/20 -YLi

WALKIE LITHIUM BATTERY PALLET TRUCK

步行式锂电托盘搬运车



产品性能特点:

手提式磷酸铁锂电池包,充电快,寿命长,免维护，更换便捷,可选配铅酸电池，续航无限;
整车简洁灵巧,转弯半径小,自重轻,适用于狭窄通道作业;
货叉最低离地高度77mm,适合双面托盘;
多功能手柄,标配直立行走按钮,龟速按钮,操作简单舒适;
可翻盖式金属罩壳，坚固耐用、方便维修;
可选装平衡轮，提高行车稳定性。

CHARACTERISTICS:

Hand-held LFP model lithium battery makes battery changingeasier and more convenient,fast charging and efficient,compatible with lead-acid batteries.
Compact and flexible,small turningradius,light weight,suitablefor narrow aisle operations.
Min. Fork lowered height: 77mm,fit for double-deck pallet.
Multi-function Handle，upright walkingbutton,turtle speed button,which is simple and comfortable foroperation.
Clamshell type metal housing,strong and durable,make the maintenance easier,Balance wheels can be installed on both sides to improve running stability.

充电快速 FAST AND CHARGING | 稳定·可靠 STABLE AND RELIABLE | 简洁·灵巧 SIMPLE AND DEXTEROUS | 维修便捷 CONVENIENT MAINTENANCE

CBD15/20 -YLi

	特性	Feature				
1.01	型号	Model		CBD15-YLi	CBD20-YLi(24V)	CBD20-YLi(48V)
1.02	操作类型	Operating type		步行式 Walkie	步行式 Walkie	步行式 Walkie
1.03	额定载重	Load capacity	kg	1500	2000	2000
1.04	载荷中心距	Load center	mm	600		
1.05	轴距	Wheel base	mm	1183		
	车轮	Wheels				
2.01	轮子类型	Wheels type		聚氨酯 PU		
2.02	驱动轮，平衡轮/承载轮数量(x=驱动轮)	Wheel quantity no. (x=driven) front/rear		1x+2/4		
2.03	驱动轮尺寸	Driving wheel size	mm	Φ210×70		
2.04	承载轮尺寸 Bearing wheel size	Bearing wheel size	mm	Φ74×60		
	尺寸	Dimension				
3.01	货叉最低离地高度	Min.fork lowered height	mm	77±2		
3.02	货叉最大起升高度	Max.fork lifting height	mm	195		
3.03	最大起升行程	Max.lifting height	mm	115		
3.04	货叉外侧间距	Outside width between forks	mm	560/685		
3.05	货叉内侧间距	Inside width between forks	mm	250/375		
3.06	货叉长度	Fork length	mm	1150		
3.07	货叉宽度	Fork width	mm	155		
3.08	货叉厚度	Fork thickness	mm	55		
3.09	整车全长	Overall length	mm	1660		
3.10	车体宽度	Overall width	mm	560/685		
3.11	整车高度(含手柄)	Overall height(With handle)	mm	1165		
3.12	整车高度(不含手柄)	Overall height(Without handle)	mm	618		
3.13	最小转弯半径	Min.Turning radius	mm	1405		
3.14	最小直角堆垛通道宽度(托盘800×1200，1200沿货叉放置)	Min.Aisle width for pallets 800×1200	mm	1716		
3.15	最小直角堆垛通道宽度(托盘1000×1200，1200沿货叉放置)	Min.Aisle width for pallets 1000×1200	mm	1753		
	性能	Performance				
4.01	最大行驶速度，满载/空载	Travel speed,laden/unladen	km/h	4/4.5		
4.02	最大起升速度，满载/空载	Lift speed,laden/unladen	mm/s	35/40		
4.03	最大下降速度，满载/空载	Lowering speed,laden/unladen	mm/s	65/60		
4.04	爬坡度，满载/空载	Gradeability,laden/unladen	%	6/16		
4.05	制动类型	Service brake type		电磁制动 Electric		
	电气配置	Electrical configuration				
5.01	驱动电机额定功率S2 60分钟	Traction motor rating at S2 60 min	kW	DC0.75	DC0.9	BLDC0.9
50.2	起升电机额定功率S3 15%	Lift motor rating at S3 15%	kW	DC 0.8		
5.03	蓄电池电压/标称容量(锂电)	Battery voltage / capacity (Lithium battery)	V/Ah	24/20(选配24/30、24/40)	24/30(选配24/40)	48/15(选配48/20)
5.04	蓄电池电压/标称容量(铅酸)	Battery voltage / capacity (Lead acid)		24/65(选配)	24/65(选配)	/
5.05	充电器规格	Charger specification	V/A	24/8(选配24/10)		48/4(选配48/5)
	重量	Weight				
6.01	蓄电池重量(±5%)(锂电)	Battery weight (±5%) (Lithium battery)	kg	3.5		4
6.02	自重(包含蓄电池,560*1150)(锂电)	Service weight with battery (Lithium battery)	kg	143		144
6.03	蓄电池重量(±5%)(铅酸)	Battery weight (±5%) (Lead acid)	kg	30		/
6.04	自重(包含蓄电池,560*1150)(铅酸)	Service weight with battery (Lead acid)	kg	170		/
	其他	Others				
7.01	噪音等级	Sound level	dB(A)	≤75		
7.02	转向类型	Steering type		机械转向 Mechanical		
7.03	驱动控类型	Drive control type		直流控制DC	直流控制DC(铅酸)/无刷控制 BLDC)(锂电)	

***本车型可选配铅酸电瓶。This model can be equipped with lead-acid batteries as an option.**

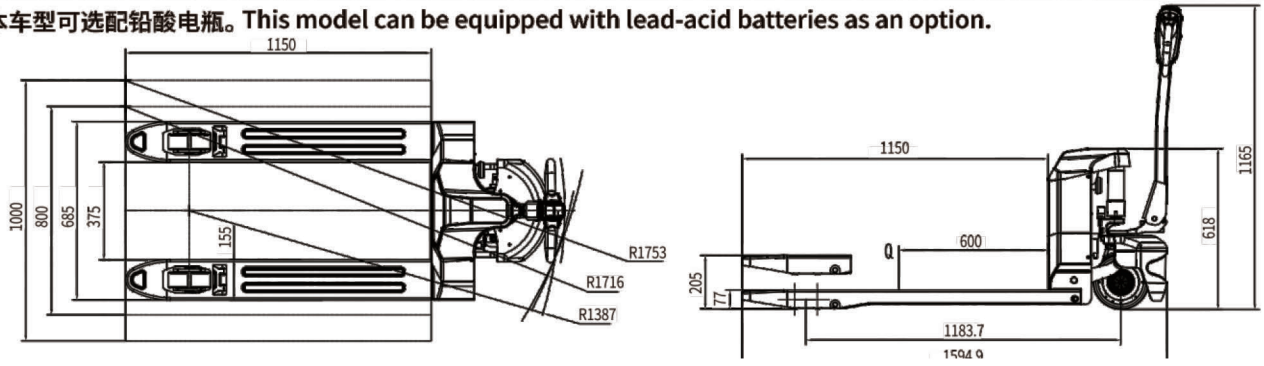

COMPANY CONTACT INFO
Website: www.e-rentals.cn
Address: 2837 Khalil Abu Al-Safa, 6976 Ar Rimal, Riyadh 13264

E-rentals

www.e-rentals.cn

CBD15/20-YZ

LITHIUM BATTERY PALLET TRUCK

电动托盘搬运车

LEAD ACID



产品性能特点:

- 手提式磷酸铁锂电池包,充电快,寿命长,免维护，更换便捷,可选配铅酸电池，续航无限;
- 整车简洁灵巧,转弯半径小，自重轻,适用于狭窄通道作业;
- 货叉最低离地高度77mm,适合双面托盘;
- 多功能手柄,标配直立行走按钮,龟速按钮,操作简单舒适;
- 可翻盖式金属罩壳，坚固耐用、方便维修;
- 可选装平衡轮，提高行车稳定性;
- 可站驾式折叠踏板，可选配座椅。

CHARACTERISTICS:

- Hand-held LFP model lithium battery makes battery changingeasier and more convenient,fast charging and efficient,compatible with lead-acid batteries.
- Compact and flexible,small turningradius,light weight,suitablefor narrow aisle operations.
- Min. Fork lowered height: 77mm,fit for double-deck pallet.
- Multi-function Handle, upright walkingbutton,turtle speed button,which is simple and comfortable foroperation.
- Clamshell type metal housing,strong and durable,make the maintenance easier.
- Balance wheels can be installed on both sides to improve running stability.
- Foldable step platform for standing driving, optional seat available.

舒适·节能 COMFORT AND ENERGY SAVING | 稳定·可靠 STABLE AND RELIABLE | 智能·安全 INTELLIGENT SECURITY | 维修便捷 CONVENIENT MAINTENANCE

CBD15-YZ

特性 Feature	单位			
型号 Model		CBD15-YZ	CBD20-YZ（24V）	CBD20-YZ（48V）
操作类型 Operating type		步行式 Walkie		
额定载重 Load capacity	kg	1500	2000	2000
载荷中心距 Load center	mm	600		
轴距 Wheel base	mm	1183		
车轮 Wheels				
轮子类型(前/后) Wheels type		PU		
驱动轮/平衡轮/承重轮数量（X=驱动轮） Wheel quantity		1/4		
驱动轮尺寸Driving wheel size	mm	Φ210×70		
承重轮尺寸Bearing wheel size	mm	Φ74×60		
尺寸 Dimension				
货叉最低离地高度 Min.fork lowered height	mm	77±2		
货叉最大起升高度 Max.fork lifting height	mm	195		
最大起升行程 Max.lifting height	mm	115		
货叉外侧间距 Outside width between forks	mm	560/685		
货叉内侧间距 Inside width between forks	mm	250/375		
货叉长度 Fork length	mm	1150/1200		
货叉宽度 Fork width	mm	155		
货叉厚度 Fork thickness	mm	55		
整车全长 Overall length	mm	2251/2301		
车体宽度 Overall width	mm	560/685		
整车高度（含手柄）Overall height(With handle)	mm	1386		
整车高度（不含手柄） Overall height(Without handle)	mm	803		
最小转弯半径Min.Turning radius	mm	1905		
最小直角堆垛通道宽度（托盘800×1200，1200沿货叉放置） Min.Aisle width	mm	2221		
最小直角堆垛通道宽度（托盘1000×1200，1200沿货叉放置） Min.Aisle	mm	2258		
性能 Performance				
最大行驶速度，满载/空载 Travel speed,laden/unladen	km/h	4/4.5		
最大起升速度，满载/空载 Lift speed,laden/unladen	mm/s	30/35		
最大下降速度，满载/空载	mm/s	35/25		
爬坡度，满载/空载 Gradeability,laden/unladen	%	8/20		
电气配置 Electrical configuration				
驱动电机/起升电机 Drive motor/ Lift motor	KW	DC0.75/DC0.8	DC0.9/DC0.8	BLDC0.9/DC0.8
蓄电池电压/容量(锂电) Battery voltage / capacity (Lithium battery)	V/Ah	24/20(选配24/30、24/40)	24/30（选配24/40）	48/15(48/20)
蓄电池电压/容量（铅酸） Battery voltage / capacity(Lead acid)	V/Ah	24/65（选配）	24/65（选配）	/
充电器规格 Charger specification	V/A	24/8（选配24/10）		48/4(选配48/5)
重量 Weight				
蓄电池重量（锂电） Battery weight (Lithium battery)	kg	3.5		4
自重（包含蓄电池）（锂电）Service weight with battery (Lithium	kg	150		150
蓄电池重量（铅酸） Battery weight(Lead acid)	kg	30		/
自重（包含蓄电池）（铅酸）Service weight with battery(Lead acid)	kg	177		/
其他				
噪音水平 Noise level	dB(A)	≤75		
转向类型 Steering type		机械转向 Mechanical		
驱动类型 Drive control type		直流控制DC	直流控制DC（铅酸）/无刷控制BLDC（锂电）	

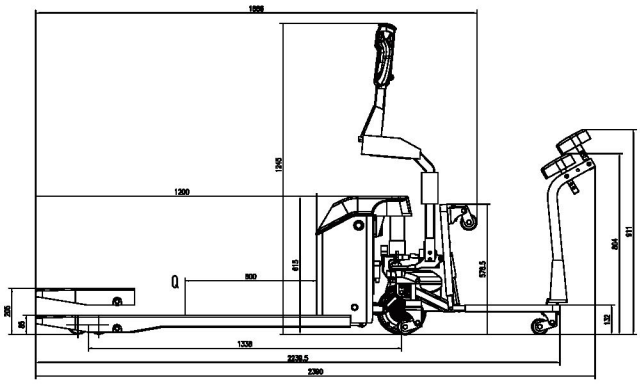

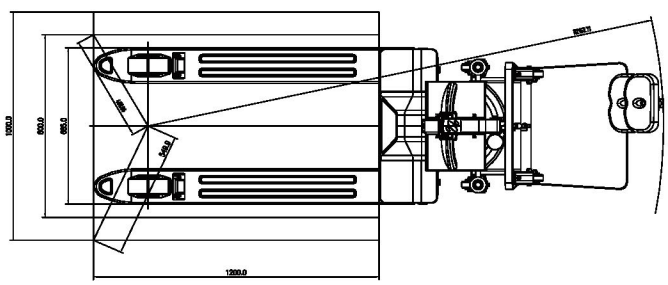

COMPANY CONTACT INFO
Website: www.e-rentals.cn
Address: 2837 Khalil Abu Al-Safa, 6976 Ar Rimal, Riyadh 13264

E-rentals

CBD20-150G

电动托盘搬运车 Electric pallet truck

产品性能特点：

货叉进出双面托盘设计；
机械转向，舒适、经济、更可靠；
交流驱动，低噪、静音，无碳刷、免维护；
电起升，快速、高效，标配起升限位装置；
低能耗，更环保
交流控制器，无级调速，动力强劲，多重自动保护：
转弯半径小，适合狭窄空间作业。

Advantages:

Fork fit for double-deck pallet.
Mechanical Steering, comfortable, economic, more reliable.
AC driving system, low noise, quiet without carbon brush and free maintenance.
Electric lifting, rapid, efficient electricity limit switch is STD.
Save eneray, more environmentally friendly.
AC controller, stepless, strong power, multiple automatic protection
Small turning radius, suitable for narrow space.



AC 金属罩壳
内置充电器

CBD20-150G

	制造商和技术参数 Manufacturer's Data and Design Characteristics			
	特性	Feature	单位	
1.1	型号	Model		CBD20
1.2	配置号	Configuration No.		150G
1.3	额定载重	Load capacity	kg	2000
1.4	载荷中心距	Load center	mm	600
1.5	轴距	Wheel base	mm	1418
1.6	操作类型	Operating type		步行式 Walkie
	车轮	Wheels		
2.1	轮子类型(前/后)	Wheels type		PU
2.2	驱动轮/平衡轮/承重轮数量	Wheel quantity Driving wheel/Balance wheel /Bearing wheel		1/2/4
2.3	驱动轮尺寸	Driving wheel size	mm	Φ228×75
2.4	平衡轮尺寸	Balance wheel size	mm	Φ90×48
2.5	承重轮尺寸	Bearing wheel size	mm	Φ80×80
	尺寸	Dimension		
3.1	货叉最低离地高度	Min.fork lowered height	mm	85
3.2	货叉最大起升高度	Max.fork lifting height	mm	205
3.3	最大起升行程	Max.lifting height	mm	120
3.4	货叉外侧间距	Outside width between forks	mm	550/600/650/685
3.5	货叉内侧间距	Inside width between forks	mm	210/260/310/345
3.6	货叉长度	Fork length	mm	1150/1200
3.7	货叉宽度	Fork width	mm	170
3.8	货叉厚度	Fork thickness	mm	75
3.9	整车全长	Overall length	mm	1830
3.10	车体宽度	Overall width	mm	726
3.11	整车高度(含手柄)	Overall height(With handle)	mm	1465
3.12	整车高度(不含手柄)	Overall height(Without handle)	mm	850
3.13	最小转弯半径	Min.Turning radius	mm	1587
3.14	最小直角堆垛通道宽度 (托盘800×1200, 1200沿货叉放置)	Min.Aisle width for pallets 800×1200	mm	1840
3.15	最小直角堆垛通道宽度 (托盘1000×1200, 1200沿货叉放置)	Min.Aisle width for pallets 1000×1200	mm	1875
	性能	Performance		
4.1	最大行驶速度,满载/空载	Travel speed,laden/unladen	km/h	3.5/4
4.2	最大起升速度,满载/空载	Lift speed,laden/unladen	mm/s	30/35
4.3	最大下降速度,满载/空载	Lowering speed,laden/unladen	mm/s	40/35
4.4	爬坡度,满载/空载	Gradeability,laden/unladen	%	5/7
	电气配置	Electrical configuration		
5.1	驱动电机/起升电机/转向电机	Drive motor/ Lift motor/Steering motor	KW	AC0.95/DC1.2
5.2	蓄电池电压/容量	Battery voltage / capacity	V/Ah	24/170(免维护/VRLA)
5.3	制动	Brake		电磁/再生Electromagnetic /Regenerative
5.4	控制器型号	Controller		CURTIS
	重量	Weight		
6.1	蓄电池重量	Battery weight	kg	122
6.2	自重(包含蓄电池)	Service weight with battery	kg	532

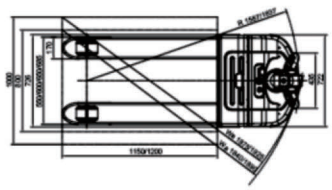

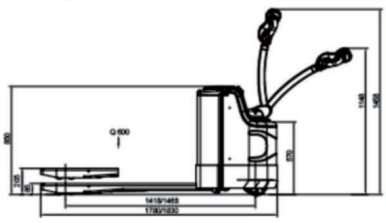

COMPANY CONTACT INFO
Website: www.e-rentals.cn
Address: 2837 Khalil Abu Al-Safa, 6976 Ar Rimal, Riyadh 13264

E-rentals

CBD18/20-180

电动托盘搬运车 Electric pallet truck



产品性能特点：

货叉进出双面托盘设计；
机械转向，舒适、经济、更可靠；
交流驱动，低噪、静音，无碳刷、免维护；
电起升，快速、高效，标配起升限位装置；
低能耗，更环保；
交流控制器，无级调速，动力强劲，多重自动保护；
转弯半径小，适合狭窄空间作业。

Characteristics:

Fork fit for double-deck pallet.
Mechanical steering,comfortable,economic,more reliable.
AC driving system,low noise,quiet,without carbon brush and free maintenance.
Electric lifting,rapid,efficient,electricity limit switch is STD.
Save energy,more environmentally friendly.
AC controller,stepless,strong power,multiple automatic protection.
Small turning radius,suitable for narrow space.

货叉适用双面托盘

AC **短轴距**

高性价比 畅销欧美

选配	Options
170Ah免维护蓄电池+内置充电器；	170Ah VRLA Battery + Built-in charger.
手柄直立行走功能；	Handle upright walking function.

CBD18/20-180

制造商和技术参数 Manufacturer' s Data and Design Characteristics				
	特性	Feature	单位	
1.1	型号	Model		CBD18/20
1.2	配置号	Configuration No.		180
1.3	额定载重	Load capacity	kg	1800/2000
1.4	载荷中心距	Load center	mm	600
1.5	轴距	Wheel base	mm	1300
1.6	操作类型	Operating type		步行式 Walkie
	车轮	Wheels		
2.1	轮子类型(前/后)	Wheels type		PU
2.2	驱动轮/平衡轮/承重轮数量	Wheel quantity Driving wheel/Balance wheel /Bearing wheel		1/1/4
2.3	驱动轮尺寸	Driving wheel size	mm	Φ248×75
2.4	平衡轮尺寸	Balance wheel size	mm	Φ115×55
2.5	承重轮尺寸	Bearing wheel size	mm	Φ84×80
	尺寸	Dimension		
3.1	货叉最低离地高度	Min.fork lowered height	mm	85
3.2	货叉最大起升高度	Max.fork lifting height	mm	205
3.3	最大起升行程	Max.lifting height	mm	120
3.4	货叉外侧间距	Outside width between forks	mm	550/600/650/685
3.5	货叉内侧间距	Inside width between forks	mm	210/260/310/345
3.6	货叉长度	Fork length	mm	1150/1200
3.7	货叉宽度	Fork width	mm	170
3.8	货叉厚度	Fork thickness	mm	75
3.9	整车全长	Overall length	mm	1650
3.10	车体宽度	Overall width	mm	725
3.11	整车高度(含手柄)	Overall height(With handle)	mm	1380
3.12	整车高度(不含手柄)	Overall height(Without handle)	mm	890
3.13	最小转弯半径	Min.Turning radius	mm	1450
3.14	最小直角堆垛通道宽度 (托盘800×1200,1200沿货叉放置)	Min.Aisle width for pallets 800×1200	mm	1806
3.15	最小直角堆垛通道宽度 (托盘1000×1200,1200沿货叉放置)	Min.Aisle width for pallets 1000×1200	mm	1846
	性能	Performance		
4.1	最大行驶速度,满载/空载	Travel speed,laden/unladen	km/h	3.5/4
4.2	最大起升速度,满载/空载	Lift speed,laden/unladen	mm/s	30/35
4.3	最大下降速度,满载/空载	Lowering speed,laden/unladen	mm/s	40/35
4.4	爬坡度,满载/空载	Gradeability,laden/unladen	%	5/7
	电气配置	Electrical configuration		
5.1	驱动电机/起升电机	Drive motor/ Lift motor	KW	AC0.95/DC1.2/DC0.15
5.2	蓄电池电压/容量	Battery voltage / capacity	V/Ah	24/210
5.3	制动	Brake		电磁/再生 Electromagnetic /Regenerative
5.4	控制器型号	Controller		ZAPI
	重量	Weight		
6.1	蓄电池重量	Battery weight	kg	192
6.2	自重(包含蓄电池)	Service weight with battery	kg	547

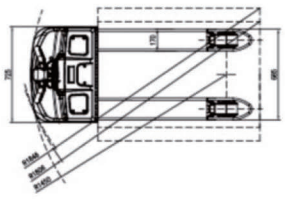

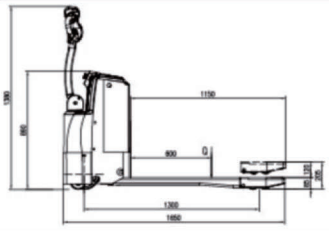

COMPANY CONTACT INFO
Website: www.e-rentals.cn
Address: 2837 Khalil Abu Al-Safa, 6976 Ar Rimal, Riyadh 13264

E-rentals

www.e-rentals.cn

CBD20/25/30 -460

ELECTRIC PALLET TRUCK

电动托盘搬运车

AC / EPS

弯道自动减速 / 侧拉蓄电池

LEAD ACID



产品性能特点: 驱动单元专利设计浮动机构;电子助力转向,轻便、静音;交流驱动电机,无碳刷、免维护;电起升,快速、高效,标配起升限位装置;蓄电池侧拉设计,更换便捷、高效;交流控制器,无级调速,动力强劲,多重自动保护;弯道自动减速功能,更安全。锂电款采用磷酸铁锂电池,充电快,效率高。

CHARACTERISTICS: Drive unit floating bodies with patent design. Electronic power steering,light and low noise. AC driving motor without carbon brush and free maintenance. Electric lifting,rapid,efficient,electricity limit switch is STD. Side-way battery,easy to replace. AC controller,stepless,strong power,multiple automatic protection. Curve automatic deceleration function,safer. The LFP model lithium batteries are fast charging and efficient.

充电快速 FAST AND CHARGING | 稳定·可靠 STABLE AND RELIABLE | 简洁·灵巧 SIMPLE AND DEXTEROUS | 维修便捷 CONVENIENT MAINTENANCE

CBD20/25/30 -460

	特性	Feature	单位		
1.1	型号	Model		CBD20/25/30	
1.2	配置号	Configuration No.		460	
1.3	额定载重	Load capacity	kg	2000/2500/3000	
1.4	载荷中心距	Load center	mm	600	
1.5	轴距	Wheel base	mm	1493	
1.6	操作类型	Operating type		乘驾式 Stand on	
	车轮	Wheels			
2.1	轮子类型(前/后)	Wheels type		PU	
2.2	驱动轮/平衡轮/承重轮数量	Wheel quantity Driving wheel/Balance wheel /Bearing wheel		1/2/4	
2.3	驱动轮尺寸	Driving wheel size	mm	Φ248×75	
2.4	平衡轮尺寸	Balance wheel size	mm	Φ115×55	
2.5	承重轮尺寸	Bearing wheel size	mm	Φ84×80	
	尺寸	Dimension			
3.1	货叉最低离地高度	Min.fork lowered height	mm	85	
3.2	货叉最大起升高度	Max.fork lifting height	mm	205	
3.3	最大起升行程	Max.lifting height	mm	120	
3.4	货叉外侧间距	Outside width between forks	mm	550/685	
3.5	货叉内侧间距	Inside width between forks	mm	210/345	
3.6	货叉长度	Fork length	mm	1150/1200	
3.7	货叉宽度	Fork width	mm	170	
3.8	货叉厚度	Fork thickness	mm	75	
3.9	整车全长	Overall length	mm	1916/2333	
3.10	车体宽度	Overall width	mm	790	
3.11	整车高度(含手柄)	Overall height(With handle)	mm	1455	
3.12	整车高度(不含手柄)	Overall height(Without handle)	mm	845	
3.13	最小转弯半径	Min.Turning radius	mm	1746/2158	
3.14	最小直角堆垛通道宽度(托盘800×1200，1200沿货叉放置)	Min.Aisle width for pallets 800×1200	mm	2046/2435	
3.15	最小直角堆垛通道宽度(托盘1000×1200，1200沿货叉放置)	Min.Aisle width for pallets 1000×1200	mm	2077/2458	
	性能	Performance			
4.1	最大行驶速度，满载/空载	Travel speed,laden/unladen	km/h	6/6	
4.2	最大起升速度，满载/空载	Lift speed,laden/unladen	mm/s	30/35	
4.3	最大下降速度，满载/空载	Lowering speed,laden/unladen	mm/s	40/35	
4.4	爬坡度，满载/空载	Gradeability,laden/unladen	%	6/16	
	电器配置	Electrical configuration			
5.1	驱动电机/起升电机/转向电机	Drive motor/Lift motor/Steering motor	KW	AC1.5/DC1.2 (2/3T2.2) /DC0.3	
5.2	制动	Brake		电磁/再生 Electromagnetic/Regenerative	
	电池 铅酸电池 锂电池(选配)	Battery		铅酸电池Lead-acid battery	锂电池Lithium battery (optional)
6.1	蓄电池电压/容量	Battery voltage/capacity	V/Ah	24/270	24/200
6.2	控制器	Controlller		ZAPI	ZAPI
6.3	电池重量	Battery weight	kg	247	105
6.4	整车重量(包含蓄电池)	Service weight (with battery)	kg	831	675

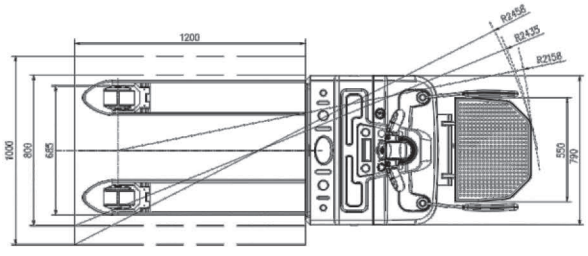

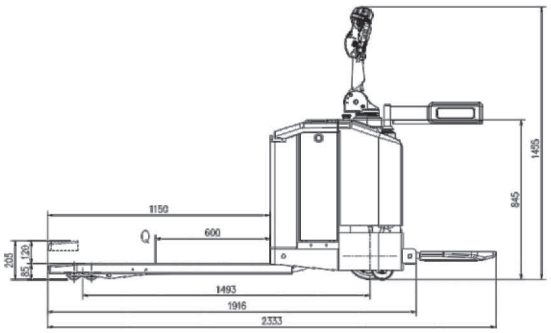

COMPANY CONTACT INFO
Website: www.e-rentals.cn
Address: 2837 Khalil Abu Al-Safa, 6976 Ar Rimal, Riyadh 13264

CBD20 25 30-URD

电动托盘搬运车Electric Pallet Truck



产品特点

- 驱动单元专利设计浮动机构；
- 永磁无刷电子转向系统，功率强劲，转向轻盈，免维护；
- 交流驱动电机，无碳刷、免维护；
- 标配1.3寸OLED显示屏多功能仪表，显示多项信息；
- 蓄电池侧拉设计，更换便捷、高效；
- 双芯片交流控制器，符合EN1175-2020标准；
- 弯道比例减速，行驶速度随着手柄角度变化而等比例降低，更安全；
- 电池不起升，更节能；
- 锂电池款采用磷酸铁锂电池，充电快，效率高。

Characteristics

- Drive unit floating bodies with patent design.
- Permanent magnet brushless electronic steering system, strong power, flexible steering, and maintenance free.
- AC driving motor without carbon brush and free maintenance.
- Stanard 1.3 cun OLED display screen multifunctional instrument, displaying multiple information
- Side-way battery,easy to replace.
- Dual chip AC controller, compliant with EN1175-2020 standard.
- Decelerate proportionally in curves, and the driving speed decreases proportionally with the change of handle angle, making it safer.
- Battery does not lift, more energy-saving.
- The LFP model lithium batteries are fast charging and efficient.

CBD20 25 30-URD

特性 Characteristics					
	型号	Model		CBD20/25-URD	CBD30-URD
1.1	操作类型	Operating type		驾乘式Riding style	
1.2	额定载重	Load capacity	kg	2000/2500	3000
1.3	载荷中心距	Load center	mm	600	
1.4	轴距	Wheel base	mm	1530	
	车轮	Wheels			
2.1	轮子类型	Wheels type		聚氨酯 PU	
2.2	驱动轮/平衡轮/承重轮数量	Wheel quantity:Driving wheel/Balance wheel /Bearing wheel		1/2/4	
2.3	驱动轮尺寸	Driving wheel size	mm	Φ248×75	
2.4	承载轮尺寸	Bearing wheel size	mm	Φ84×80	
2.5	平衡轮尺寸	Balance wheel size	mm	Φ115×55	
	尺寸	Dimensions			
3.1	货叉最低离地高度	Min.Fork lowered height	mm	85	
3.2	货叉最大起升高度	Max.Fork lifting height	mm	205	
3.3	最大起升行程	Max.Lifting height	mm	120	
3.4	货叉外侧间距	Outside width between forks	mm	550/685	
3.5	货叉内侧间距	Inside width between forks	mm	210/345	
3.6	货叉长度	Fork length	mm	1200	
3.7	货叉宽度	Fork width	mm	170	
3.8	货叉厚度	Fork thickness	mm	55	
3.9	整车全长	Overall length	mm	2375	
3.10	车体宽度	Overall width	mm	790	
3.11	整车高度（含手柄）	Overall height(With handle)	mm	1442	
3.12	整车高度（不含手柄）	Overall height(Without handle)	mm	1025	
3.13	最小转弯半径	Min.Turning radius	mm	1780/2192	
3.14	最小直角堆垛通道宽度（托盘800×1200，1200沿货叉放置）	Min.Aisle width for pallets 800×1200	mm	2422/2834	
3.15	最小直角堆垛通道宽度（托盘1000×1200，1200沿货叉放置）	Min.Aisle width for pallets 1000×1200	mm	2515/2937	
	性能	Performance			
4.1	最大行驶速度，满载/空载	Travelling speed,laden/unladen	km/h	6/6	
4.2	最大起升速度，满载/空载	Lifting speed,laden/unladen	mm/s	30/35	
4.3	最大下降速度，满载/空载	Lowering speed,laden/unladen	mm/s	40/35	
4.4	爬坡度，满载/空载	Gradeability,laden/unladen	%	6/16	
4.5	制动类型	Service brake type		电磁制动 Electric	
	电气配置	Electrical configuration			
5.1	驱动电机额定功率S2 60分钟	Traction motor rating at S2 60 min	kW	AC 1.5	
5.2	起升电机额定功率S3 15%	Lift motor rating at S3 15%	kW	DC 2.2	
5.3	蓄电池电压/标称容量	Battery voltage / capacity	V/Ah	铅酸电池Lead-acid battery	锂电Lithium battery (Optional)
				24/270	24/200
5.4	充电器规格	Charger specification	V/A	24/50	24/100
	重量	Weight			
6.1	蓄电池重量（±5%）	Battery weight (±5%)	kg	247	105
6.2	自重（包含蓄电池）	Service weight with battery	kg	827	685
	其他	Others			
7.1	转向类型	Steering type		电转向 Electronic	
7.2	驱动控类型	Drive control type		交流控制 AC	
7.3	控制器	Controller		前拓 QEXPEND	

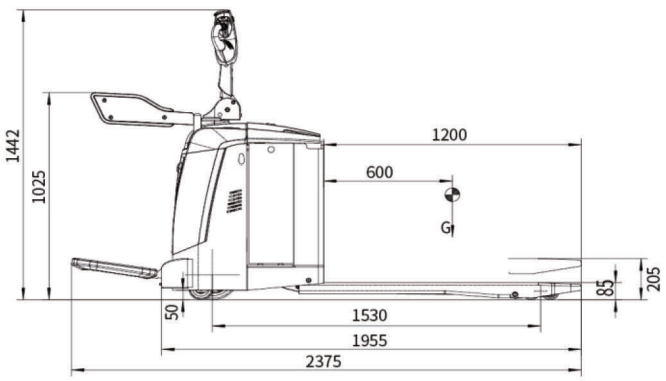

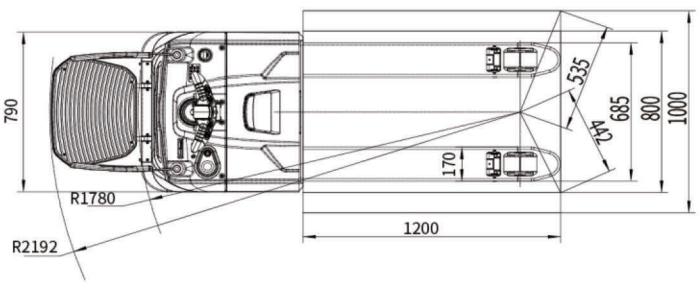

COMPANY CONTACT INFO
Website: www.e-rentals.cn
Address: 2837 Khalil Abu Al-Safa, 6976 Ar Rimal, Riyadh 13264

E-rentals

CBD40 50-460

电动托盘搬运车 Electric pallet truck



产品性能特点

- 驱动单元专利设计浮动机构；
- 永磁无刷电子转向系统，功率强劲，转向轻盈，免维护；
- 交流驱动电机，无碳刷、免维护；
- 蓄电池侧拉设计，更换便捷、高效；
- 双芯交流控制器，符合EN1175-2020标准；
- 弯道比例减速，行驶速度随着手柄角度变化而等比例降低，更安全；
- 电池不起升，更节能。

Configuration and performance

- Drive unit floating bodies with patent design.
- Permanent magnet brushless electronic steering system,strong power,flexible steering,andmaintenance free.
- AC driving motor without carbon brush and free maintenance.
- Side-way battery,easyto replace.
- Dual chip AC controller,compliant with EN1175-2020 standard.
- Decelerate proportionally in curves,and the driving speed decreases proportionally with the change of handle angle,making it safer.
- Battery does not lift,more energy-saving.

CBD40 50-460

制造商和技术参数 Manufacturer' s Data and Design Characteristics					
	特性	Feature	单位		
1.1	型号	Model		CBD40-460	CBD50-460
1.2	操作类型	Operating type		乘驾式 Stand on	
1.3	额定载重	Load capacity	kg	4000	5000
1.4	轴距	Wheel base	mm	2394	
	车轮	Wheels			
2.1	轮子类型(前/后)	Wheels type		PU	
2.2	驱动轮/平衡轮/承重轮数量	Wheel quantity Driving wheel/Balance wheel/Bearing wheel		1/4/8	
2.3	驱动轮尺寸	Driving wheel size	mm	Φ248×75	
2.4	平衡轮尺寸	BALANCE wheel size	mm	Φ115×55	
2.5	承重轮尺寸	Bearing wheel size	mm	Φ82×50	
	尺寸	Dimension			
3.1	货叉最低离地高度	Min.fork lowered height	mm	85	
3.2	货叉最大起升高度	Max.fork lifting height	mm	205	
3.3	最大起升行程	Max.lifting height	mm	120	
3.4	货叉外侧间距	Outside width between forks	mm	760	
3.5	货叉长度	Fork lenght	mm	2000	
3.6	货叉宽度	Fork width	mm	230	
3.7	货叉厚度	Fork thickness	mm	80	
3.8	整车全长(踏板收起/放下)	Overall lenght	mm	2820/3236	
3.9	车体宽度	Owerall width	mm	910	
3.10	整车高度(含手柄)	Overall height(With handle)	mm	1455	
3.11	整车高度(不含手柄)	Overall height(Without handle)	mm	845	
3.12	最小转弯半径	Min.Turning radius	mm	2641/3053	
3.13	最小直角堆垛通道宽度 (托盘1200×2400, 2400沿货叉放置)	Min.Aisle width for pallets 1200×2400	mm	4022/4439	
	性能	Performance			
4.1	最大行驶速度，满载/空载	Travelling speed,laden/unladen	km/h	5/6	
4.2	最大起升速度，满载/空载	Lifting speed,laden/unladen	mm/s	22/30	
4.3	最大下降速度，满载/空载	Lowering speed,laden/unladen	mm/s	35/30	
4.4	爬坡度，满载/空载	Gradeability,laden/unladen	%	3/7	
	电气配置	Electrical configuration			
5.1	驱动电机/起升电机/转向电机	Drive motor/Lift motor/Steering motor	KW	AC3.0/DC2.2/DC0.3	
5.2	蓄电池电压/容量	Battery voltage/capacity	V/Ah	24/270(铅酸电池Lead-acid battery)	24/200(锂电池Lithium battery)
5.3	充电器规格	Charger specification	V/A	24/50	24/100
5.4	制动	Brake		电磁/再生 Electromagnetic/Regenerative	
5.5	控制器型号	Controller		前拓 QEXPEND	
	重量	Weight			
6.1	蓄电池重量	Battery weight	kg	247	104
6.2	自重(包含蓄电池)	Service weight with battery	kg	1097	954
	其他	Others			
7.1	转向类型	Steering type		电转向 Electronic	
7.2	驱动控类型	Drive control type		交流控制 AC	

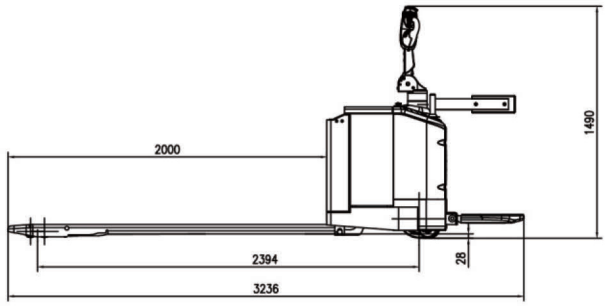

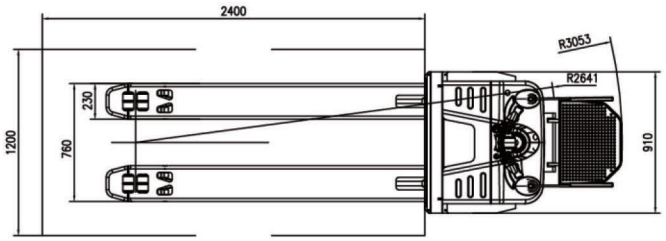

COMPANY CONTACT INFO
Website: www.e-rentals.cn
Address: 2837 Khalil Abu Al-Safa, 6976 Ar Rimal, Riyadh 13264

E-rentals

www.e-rentals.cn

CBD20/25/30-470

ELECTRIC PALLET TRUCK

电动托盘搬运车

AC / EPS

弯道自动减速

LEAD ACID



叉腿超宽 非标定制

产品性能特点: 驱动单元专利设计浮动机构;电子助力转向,轻便、静音;交流驱动电机,无碳刷、免维护;
电起升,快速、高效,标配起升限位装置;交流控制器,无级调速,动力强劲,多重自动保护;锂电款采用磷酸铁锂电池,充电快,效率高。

CHARACTERISTICS: Drive unit floating bodies with patent design.Electronic power steering,light and low noise.AC driving motor without carbon brush and free maintenance.Electric lifting,rapid,efficient,electricity limit switch is STD.AC controller,stepless,strong power,multiple automatic protection.The LFP model lithium batteries are fast charging and efficient.

舒适·节能 COMFORT AND ENERGY SAVING | 稳定·可靠 STABLE AND RELIABLE | 智能·安全 INTELLIGENT SECURITY | 维修便捷 CONVENIENT MAINTENANCE

CBD20/25 /30-470

	特性	Feature	单位	
1.1	型号	Model		CBD20/25/30
1.2	配置号	Configuration No.		470
1.3	额定载重	Load capacity	kg	2000/2500/3000
1.4	载荷中心距	Load center	mm	600
1.5	轴距	Wheel base	mm	1480
1.6	操作类型	Operating type		乘驾式 Stand on
	车轮	Wheels		
2.1	轮子类型(前/后)	Wheels type		PU
2.2	驱动轮/平衡轮/承重轮数量	Wheel quantity Driving wheel/Balance wheel /Bearing wheel		1/2/4
2.3	驱动轮尺寸	Driving wheel size	mm	Φ248×75
2.4	平衡轮尺寸	Balance wheel size	mm	Φ115×55
2.5	承重轮尺寸	Bearing wheel size	mm	Φ84×80
	尺寸	Dimension		
3.1	货叉最低离地高度	Min.fork lowered height	mm	85
3.2	货叉最大起升高度	Max.fork lifting height	mm	205
3.3	最大起升行程	Max.lifting height	mm	120
3.4	货叉外侧间距	Outside width between forks	mm	540/600/650/685
3.5	货叉内侧间距	Inside width between forks	mm	200/260/310/345
3.6	货叉长度	Fork length	mm	1150/1200
3.7	货叉宽度	Fork width	mm	170
3.8	货叉厚度	Fork thickness	mm	75
3.9	整车全长,踏板收起/放下	Overall length	mm	1920/2335
3.10	车体宽度	Overall width	mm	720
3.11	整车高度(含手柄)	Overall height(With handle)	mm	1455
3.12	整车高度(不含手柄)	Overall height(Without handle)	mm	900
3.13	最小转弯半径,踏板收起/放下	Min.Turning radius	mm	1735/2140
3.14	最小直角堆垛通道宽度 (托盘800×1200,1200沿货叉放置)	Min.Aisle width for pallets 800×1200	mm	2060/2451
3.15	最小直角堆垛通道宽度 (托盘1000×1200,1200沿货叉放置)	Min.Aisle width for pallets 1000×1200	mm	2090/2468
	性能	Performance		
4.1	最大行驶速度,满载/空载	Travel speed,laden/unladen	km/h	6/6
4.2	最大起升速度,满载/空载	Lift speed,laden/unladen	mm/s	30/35
4.3	最大下降速度,满载/空载	Lowering speed,laden/unladen	mm/s	40/35
4.4	爬坡度,满载/空载	Gradeability,laden/unladen	%	6/16
	电气配置	Electrical configuration		
5.1	驱动电机/起升电机/转向电机	Drive Motor / Lift Motor / Steering Motor	KW	AC1.5/DC1.2(2/3T2.2)/DC0.3
5.2	制动	Brake		电磁/再生 Electromagnetic/Regenerative
	电池	Battery		铅酸电池Lead-acid battery / 锂电池Lithium battery(optional)
6.1	电池电压/容量	Battery voltage/capacity	V/Ah	24/280 / 24/200
6.2	控制器	Controlller	Q	前拓 / 前拓
6.3	电池重量	Battery	kg	238 / 104
6.4	自重(包含电池)	Service weight (with battery)	kg	784 / 613

CBD30-470与CBD30-460差异

车型 Type	额定载荷 Load capacity (Kg)	电池容量 Battery capacity (Ah)		货差外侧宽度 Overall fork width (mm)	电池安装 Battery installation
		标配STD	选配OPTION		
CBD30-470	2000-3000	280	360	540/600/650/685/1070	吊装/Hoisting
CBD30-460	2000-3000	270	210/350	550/600/650/685	侧拉/Side-way battery

COMPANY CONTACT INFO
Website: www.e-rentals.cn
Address: 2837 Khalil Abu Al-Safa, 6976 Ar Rimal, Riyadh 13264

E-rentals

CBD20/25/30-VRD

电动托盘搬运车Electric Pallet Truck



产品特点

- 驱动单元专利设计浮动机构；
- 永磁无刷电子转向系统，功率强劲，转向轻盈，免维护；
- 交流驱动电机，无碳刷、免维护；
- 双芯片交流控制器，符合EN1175-2020标准；
- 弯道比例减速，行驶速度随着手柄角度变化而等比例降低，更安全；
- 锂电款采用磷酸铁锂电池，充电快，效率高；
- 连杆采用拉杆设计，不易变形；
- 后置导轨设计，货叉垂直起升。

Characteristics

- Drive unit floating bodies with patent design.
- Permanent magnet brushless electronic steering system, strong power, flexible steering, and maintenance free.
- AC driving motor without carbon brush and free maintenance.
- Dual chip AC controller, compliant with EN1175-2020 standard.
- Decelerate proportionally in curves, and the driving speed decreases proportionally with the change of handle angle, making it safer.
- The LFP model lithium batteries are fast charging and efficient.
- The connecting rod adopts a pull rod design, which is not easily deformed.
- Rear guide rail design, vertical lifting of forks.

CBD20/25/30-VRD

特性 Characteristics					
	型号	Model		CBD20/25-VRD	CBD30-VRD
1.1	操作类型	Operating type		站驾式 Stand on	
1.2	额定载重	Load capacity	kg	2000/2500	3000
1.3	载荷中心距	Load center	mm	600	
1.4	轴距	Wheel base	mm	1518	
	车轮	Wheels			
2.1	轮子类型	Wheels type		聚氨酯 PU	
2.2	驱动轮/平衡轮/承重轮数量Wheel quantity:Driving wheel/Balance wheel /Bearing wheel			1/2/4	
2.3	驱动轮尺寸	Driving wheel size	mm	Φ248X80	
2.4	承载轮尺寸	Bearing wheel size	mm	Φ84×70	
2.5	平衡轮尺寸	Balance wheel size	mm	Φ115×55	
	尺寸	Dimensions			
3.1	货叉最低离地高度	Min.Fork lowered height	mm	85	
3.2	货叉最大起升高度	Max.Fork lifting height	mm	205	
3.3	最大起升行程	Max.Lifting height	mm	120	
3.4	货叉外侧间距	Outside width between forks	mm	550/685	
3.5	货叉内侧间距	Inside width between forks	mm	210/345	
3.6	货叉长度	Fork length	mm	1200	
3.7	货叉宽度	Fork width	mm	170	
3.8	货叉厚度	Fork thickness	mm	55	
3.9	整车全长	Overall length	mm	2357	
3.10	车体宽度	Overall width	mm	790	
3.11	整车高度(含手柄)	Overall height(With handle)	mm	1442	
3.12	整车高度(不含手柄)	Overall height(Without handle)	mm	1025	
3.13	最小转弯半径	Min.Turning radius	mm	1775/2175	
3.14	最小直角堆垛通道宽度(托盘800×1200,1200沿货叉放置)	Min.Aisle width for pallets 800×1200	mm	2417/2817	
3.15	最小直角堆垛通道宽度(托盘1000×1200,1200沿货叉放置)	Min.Aisle width for pallets 1000×1200	mm	2510/2910	
	性能	Performance			
4.1	最大行驶速度,满载/空载	Travelling speed,laden/unladen	km/h	6/6	
4.2	最大起升速度,满载/空载	Lifting speed,laden/unladen	mm/s	30/35	
4.3	最大下降速度,满载/空载	Lowering speed,laden/unladen	mm/s	40/35	
4.4	爬坡度,满载/空载	Gradeability,laden/unladen	%	6/16	
4.5	制动类型	Service brake type		电磁制动 Electric	
	电气配置	Electrical configuration			
5.1	驱动电机额定功率S2 60分钟	Traction motor rating at S2 60 min	kW	AC 1.5	
5.2	起升电机额定功率S3 15%	Lift motor rating at S3 15%	kW	DC 2.2	
5.3	蓄电池电压/标称容量	Battery voltage / capacity	V/Ah	铅酸电池Lead-acid battery	锂电Lithium battery(Optional)
				24/270	24/200
5.4	充电器规格	Charger specification	V/A	24/50	24/100
	重量	Weight			
6.1	蓄电池重量(±5%)	Battery weight(±5%)	kg	247	105
6.2	自重(包含蓄电池)	Service weight with battery	kg	827	685
	其他	Others			
7.1	转向类型	Steering type		电转向 Electronic	
7.2	驱动控类型	Drive control type		交流控制 AC	
7.3	控制器	Controller		前拓 QEXPEND	

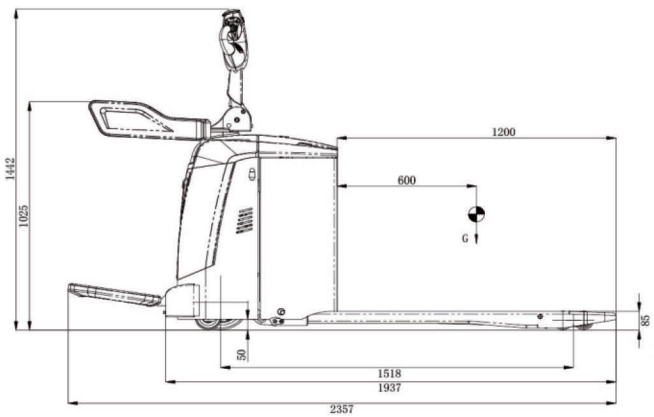

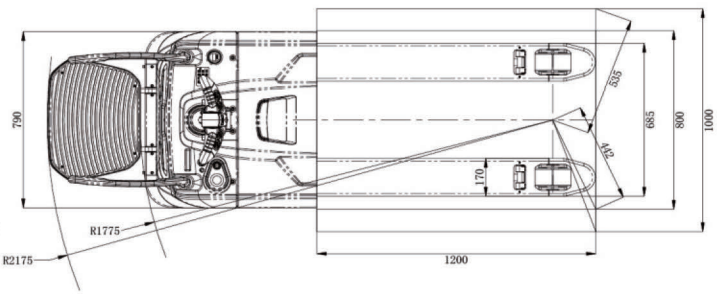

COMPANY CONTACT INFO
Website: www.e-rentals.cn
Address: 2837 Khalil Abu Al-Safa, 6976 Ar Rimal, Riyadh 13264

CBD20-490

电动托盘搬运车 Electric pallet truck

高端品质 极致尊享

弯道自动减速

货叉适用双面托盘

AC **EPS**

产品性能特点：

1.驱动单元专利设计浮动机构；
2.选配高速版，行驶速度11公里/小时；
3.电子助力转向，轻便、静音；
4.交流驱动电机，无碳刷、免维护；
5.电起升，快速、高效，标配起升限位装置；
6.交流控制器，无级调速，动力强劲，多重自动保护；
7.弯道自动减速功能，更安全；
8.半包围驾驶舱，更关心您的安全；
9.锂电款采用磷酸铁锂电池，充电快，效率高。

Characteristics:

1.Drive unit floating bodies with patent design.
2.Optional high-speed version which driving speed can reach 11km/h.
3.Electronic power steering,light and low noise.
4.AC driving motor without carbon brush and free maintenance.
5.Electric lifting,rapid,efficient,electricity limit switch is STD.
6.AC controller,stepless,strong power,multiple automatic protection.
7.Curve automatic deceleration function,safer.
8.Surrounded by half a cockpit,care for your safety.
9.The LFP model lithium batteries are fast charging and efficient.



选配	Options
11Km/h低速行驶；	11Km/h lower travel speed (ZAPI controller).
320Ah大容量蓄电池（不可选侧拉）；	320Ah battery capacity (no side-way option).
侧拉蓄电池（280Ah）；	Side-way battery (280Ah).

CBD20-490

制造商和技术参数 Manufacturer's Data and Design Characteristics					
	特性	Feature	单位		
1.1	型号	Model		CBD20	
1.2	配置号	Configuration No.		490	
1.3	额定载重	Load capacity	kg	2000	
1.4	载荷中心距	Load center	mm	600	
1.5	轴距	Wheel base	mm	1569	
1.6	操作类型	Operating type		乘驾式 Stand on	
	车轮	Wheels			
2.1	轮子类型(前/后)	Wheels type		PU	
2.2	驱动轮/平衡轮/承重轮数量	Wheel quantity Driving wheel/Balance wheel /Bearing wheel		1/2/4	
2.3	驱动轮尺寸	Driving wheel size	mm	Φ248×75	
2.4	平衡轮尺寸	Balance wheel size	mm	Φ115×55	
2.5	承重轮尺寸	Bearing wheel size	mm	Φ84×80	
	尺寸	Dimension			
3.1	货叉最低离地高度	Min.fork lowered height	mm	85	
3.2	货叉最大起升高度	Max.fork lifting height	mm	205	
3.3	最大起升行程	Max.lifting height	mm	120	
3.4	货叉外侧间距	Outside width between forks	mm	550/600/650/685	
3.5	货叉内侧间距	Inside width between forks	mm	210/260/310/345	
3.6	货叉长度	Fork length	mm	1150/1200	
3.7	货叉宽度	Fork width	mm	170	
3.8	货叉厚度	Fork thickness	mm	75	
3.9	整车全长	Overall length	mm	2465	
3.10	车体宽度	Overall width	mm	790	
3.11	整车高度(含手柄)	Overall height(With handle)	mm	1172	
3.12	整车高度(不含手柄)	Overall height(Without handle)	mm	—	
3.13	最小转弯半径	Min.Turning radius	mm	2278	
3.14	最小直角堆垛通道宽度 (托盘800×1200,1200沿货叉放置)	Min.Aisle width for pallets 800×1200	mm	2568	
3.15	最小直角堆垛通道宽度 (托盘1000×1200,1200沿货叉放置)	Min.Aisle width for pallets 1000×1200	mm	2589	
	性能	Performance			
4.1	最大行驶速度,满载/空载	Travel speed,laden/unladen	km/h	7/7	10/11 (选配 optional)
4.2	最大起升速度,满载/空载	Lift speed,laden/unladen	mm/s	30/35	
4.3	最大下降速度,满载/空载	Lowering speed,laden/unladen	mm/s	40/35	
4.4	爬坡度,满载/空载	Gradeability,laden/unladen	%	10/15	
	电气配置	Electrical configuration			
5.1	驱动电机/起升电机/转向电机	Drive motor/Lift motor/Steering motor	KW	AC3/DC1.2/DC0.3	
5.2	制动	Brake		电磁/再生 Electromagnetic/Regenerative	
	电池	Battery		铅酸电池Lead-acid battery	锂电池Lithium battery (optional)
6.1	电池电压/容量	Battery voltage/capacity	V/Ah	24/280	24/200
6.2	控制器	Controlller		ZAPI	ZAPI
6.3	电池重量	Battery	kg	243	104
6.4	自重(包含电池)	Service weight (with battery)	kg	840	685

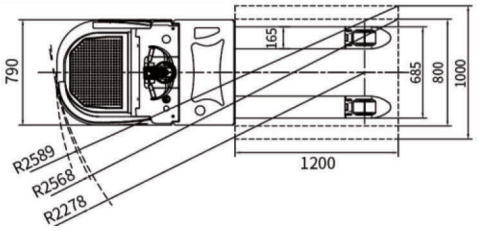

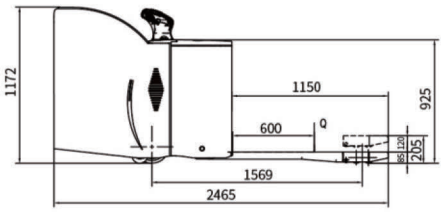

COMPANY CONTACT INFO
Website: www.e-rentals.cn
Address: 2837 Khalil Abu Al-Safa, 6976 Ar Rimal, Riyadh 13264

CBD20/25-491 (UGD)

电动托盘搬运车
Electric Pallet Truck



产品性能特点：

- 驱动单元专利设计浮动机构。
- 高速快捷，行驶速度11公里/小时。
- 电子助力转向，轻便、静音。
- 交流驱动电机，无碳刷、免维护。
- 电起升，快速、高效，标配起升限位装置。
- 交流控制器，无及调速，动力强劲，多重自动保护。
- 弯道自动减速功能，更安全。
- 半包围驾驶舱，更关心您的安全。
- 独特的节能升降机构-导轨升降机构，电池不起升，更节能。
- 选配手柄高度可调。
- 锂电款采用磷酸铁锂电池，充电快、效率高。
- 蓄电池侧拉设计，更换便捷、高效。

Characteristics:

- Drive unit floating bodies with patent design.
- High running speed,driving speed is 11Km/h.
- Electronic power steering,light and low noise.
- AC driving motor without carbon brush and free maintenance.
- Electric lifting,rapid,efficient,electricity limit switch is STD.
- AC controller,stepless,strong power,multiple automatic protection.
- Curve automatic deceleration function,safer.
- Surrounded by half a cockpit,care for your safety.
- Unique energy-saving lifting mechanism - guide rail lifting mechanism, battery not lifting, more energy-saving.
- Optional handle with adjustable height.
- The LFP model lithium batteries are fast charging and efficient.
- Side-way battery,easy to replace.

CBD20/25-491 (UGD)

	制造商和技术参数 Manufacturer' s Data and Design Characteristics				
	特性 Features				
1.01	型号	Model	kg	CBD20/25-491 (UGD)	
1.02	操作类型	Operating type	mm	乘驾式 Ride-on	
1.03	额定载重	Load capacity	mm	2000/2500	
1.04	载荷中心距	Load center		600	
1.05	轴距	Wheel base		1530	
	车轮 Wheels				
2.01	轮子类型	Wheels type		聚氨酯 PU	
2.02	驱动轮/平衡轮/承重轮数量	Wheel quantityDriving wheel/Balance wheel /Bearing wheel		1/2/4	
2.03	驱动轮尺寸	Driving wheel size	mm	Φ248X75	
2.04	承载轮尺寸	Bearing wheel size	mm	Φ84×80	
2.05	平衡轮尺寸	Balance wheel size	mm	Φ115×55	
	尺寸 Dimension				
3.01	货叉最低离地高度	Min.fork lowered height	mm	85	
3.02	货叉最大起升高度	Max.fork lifting height	mm	205	
3.03	最大起升行程	Max.lifting height	mm	120	
3.04	货叉外侧间距	Outside width between forks	mm	550/685	
3.05	货叉内侧间距	Inside width between forks	mm	210/345	
3.06	货叉长度	Fork length	mm	1150/1200	
3.07	货叉宽度	Fork width	mm	170	
3.08	货叉厚度	Fork thickness	mm	55	
3.09	整车全长	Overall length	mm	2385/2435	
3.10	车体宽度	Overall width	mm	812	
3.11	整车高度(含手柄)	Overall height(With handle)	mm	1238	
3.12	最小转弯半径	Min.Turning radius	mm	2210/2260	
3.13	最小直角堆垛通道宽度(托盘800×2400，2400沿货叉放置)	Min.Aisle width for pallets 800×2400	mm	2850/2900	
3.14	最小直角堆垛通道宽度(托盘1000×2400，2400沿货叉放置)	Min.Aisle width for pallets 1000×2400	mm	2943/2993	
	性能 Performance				
4.01	最大行驶速度，满载/空载	Travelling speed,laden/unladen	km/h	10/11	
4.02	最大起升速度，满载/空载	Lifting speed,laden/unladen	mm/s	30/35	
4.03	最大下降速度，满载/空载	Lowering speed,laden/unladen	mm/s	40/35	
4.04	爬坡度，满载/空载	Gradeability,laden/unladen	%	10/15	
4.05	制动类型	Service brake type		电磁制动Electromagnetic	
	电气配置 Electrical configuration				
5.01	驱动电机额定功率S2 60分钟	Traction motor rating at S2 60 min	kW	AC 3	
5.02	起升电机额定功率S3 15%	Lift motor rating at S3 15%	kW	DC 2.2	
5.03	电池	Battery		铅酸电池Lead-acid battery	锂电Lithium battery (Optional)
5.04	蓄电池电压/标称容量	Battery voltage / capacity	V/Ah	24/270	24/200
5.05	充电器规格	Charger specification	V/A	24/50	24/100
	重量 Weight				
6.01	蓄电池重量(±5%)	Battery weight (±5%)	kg	247	105
6.02	自重(包含蓄电池)	Service weight with battery	kg	865	723
	其他 Others				
7.01	噪音等级	Sound level	dB(A)	≤69	
7.02	转向类型	Steering type		电转向 Electronic	
7.03	驱动控类型	Drive control type		交流控制 AC	
7.04	控制器	Controller		前拓 QEXPEND	

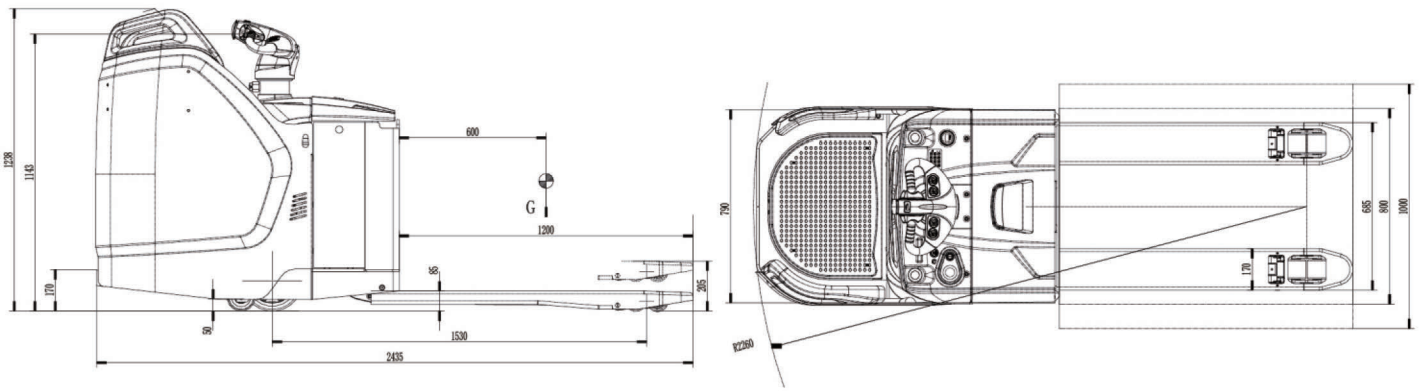

COMPANY CONTACT INFO
Website: www.e-rentals.cn
Address: 2837 Khalil Abu Al-Safa, 6976 Ar Rimal, Riyadh 13264

E-rentals

CBD35-510/520/530

电动托盘搬运车 Electric pallet truck

产品性能特点：

驱动单元专利设计浮动机构；
电子助力转向，轻便、静音；
交流驱动电机，无碳刷、免维护；
电起升，快速、高效，标配起升限位装置；
交流控制器，无级调速，动力强劲，多重自动保护；
弯道自动减速功能，更安全。
标配挡货架，蓄电池双向侧拉设计；
可选双托盘货叉和单托盘货叉。

Characteristics:

Drive unit floating bodies with patent design.
Electronic power steering,light and low noise.
AC driving motor without carbon brush and free maintenance.
Electric lifting,rapid,efficient,electricity limit switch is STD.
AC controller,stepless,strong power,multiple automatic protection.
Curve automatic deceleration function,safer.
Load backrest and side-way battery is STD.
Double or single pallet is option.



AC　EPS　双托盘 高效率

选配	Options
FAAM 330/490Ah容量蓄电池	FAAM 330/490Ah battery capacity

CBD35-510/520/530

制造商和技术参数 Manufacturer's Data and Design Characteristics						
	特性	Feature	单位			
1.1	型号	Model		CBD35	CBD35	CBD35
1.2	配置号	Configuration No.		510	520	530
1.3	额定载重	Load capacity	kg	3500		
1.4	载荷中心距	Load center	mm	双托盘 Double pallet	单托盘 single pallet	
1.5	轴距	Wheel base	mm	2084	1569	1569
1.6	操作类型	Operating type		站驾式 Rider		步行式 walkie
	车轮	Wheels				
2.1	轮子类型(前/后)	Wheels type		PU	PU	PU
2.2	驱动轮/平衡轮/承重轮数量	Wheel quantity Driving wheel/Balance wheel /Bearing wheel		1/4/2	1/4/2	1/4/2
2.3	驱动轮尺寸	Driving wheel size	mm	Φ300×120		
2.4	平衡轮尺寸	Balance wheel size	mm	Φ115×55		
2.5	承重轮尺寸	Bearing wheel size	mm	Φ84×152		
	尺寸	Dimension				
3.1	货叉最低离地高度	Min.fork lowered height	mm	85		
3.2	货叉最大起升高度	Max.fork lifting height	mm	230		
3.3	最大起升行程	Max.lifting height	mm	145		
3.4	货叉外侧间距	Outside width between forks	mm	680		
3.5	货叉内侧间距	Inside width between forks	mm	180	220	
3.6	货叉长度	Fork length	mm	2432	1212/1365/1517	
3.7	货叉宽度	Fork width	mm	250	230	
3.8	货叉厚度	Fork thickness	mm	60		
3.9	整车全长	Overall length	mm	3605	2374	2222
3.10	车体宽度	Overall width	mm	930		832
3.11	整车高度(含手柄)	Overall height(With handle)	mm	1536		
3.12	整车高度(不含手柄)	Overall height(Without handle)	mm	1280		
3.13	最小转弯半径	Min.Turning radius	mm	2708	2190	2051
3.14	最小直角堆垛通道宽度(托盘1200×1200)	Min.Aisle width for pallets 1200×1200	mm	3650	2536	2365
	性能	Performance				
4.1	最大行驶速度，满载/空载	Travel speed,laden/unladen	km/h	11/12		4/4.5
4.2	最大起升速度，满载/空载	Lift speed,laden/unladen	mm/s	35/40		
4.3	最大下降速度，满载/空载	Lowering speed,laden/unladen	mm/s	35/30		
4.4	爬坡度，满载/空载	Gradeability,laden/unladen	%	5/12		5/10
	电气配置	Electrical configuration				
5.1	驱动电机/起升电机/转向电机	Drive motor/ Lift motor/Steering motor	KW	AC4.2/DC2.2/DC0.15		AC1.5/DC2.2/DC0.15
5.2	蓄电池电压/容量	Battery voltage / capacity	V/Ah	24/360		
5.3	制动	Brake		电磁/再生Electromagnetic /Regenerative		
5.4	控制器型号	Controller		ZAPI		ZAPI
	重量	Weight				
6.1	蓄电池重量	Battery weight	kg	302		
6.2	自重(包含蓄电池)	Service weight with battery	kg	1146	1038	910

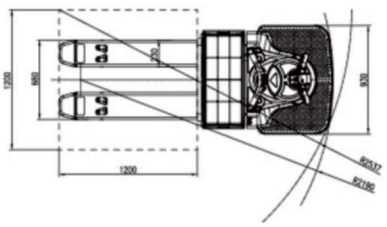

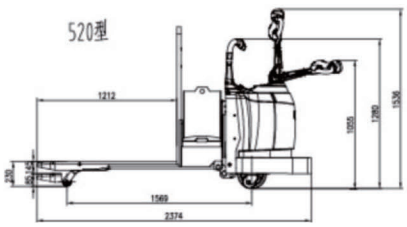

COMPANY CONTACT INFO
Website: www.e-rentals.cn
Address: 2837 Khalil Abu Al-Safa, 6976 Ar Rimal, Riyadh 13264

CBD40/45/50-510
CBD40/45/50-520
电动托盘搬运车 Electric pallet truck



产品性能特点：

驱动单元专利设计浮动机构；
电子助力转向，轻便、静音；
交流驱动电机，无碳刷、免维护；
电起升，快速、高效，标配起升限位装置；
蓄电池侧拉设计，更换便捷、高效；
交流控制器，无级调速，动力强劲，多重自动保护；
弯道自动减速功能，更安全；
标配挡货架，蓄电池双向设计；
可选双托盘货叉和单托盘货叉。
锂电款采用磷酸铁锂电池，充电快，效率高。

Advantages:

Drive unit floating bodies with patent design.
Electronic power steering,light and low noise.
AC driving motor without carbon brush and free maintenance.
Electric lifting,rapid,efficient,electricity limit switch is STD.
Side-way battery,easy to replace.
AC controller,stepless,strong power,multiple automatic protection.
Curve automatic deceleration function,safer.
Load backrest and side-way battery is STD.
Double or single pallet is option.
The LFP model lithium batteries are fast charging and efficient.

选配	Options
FAAM 330/490Ah容量蓄电池	FAAM 330/490Ah battery capacity.
锂电池	Lithium battery.

CBD40/45/50-510
CBD40/45/50-520

制造商和技术参数 Manufacturer' s Data and Design Characteristics					
	特性	Feature	单位		
1.1	型号 Model	Model		CBD40/45/50	
1.2	配置号 Configuration No.	Configuration No.		510	520
1.3	额定载重 Load capacity	Load capacity	kg	4000/4500/5000	
1.4	适用托盘 Apply to pallet	Load center	mm	双托盘 Double pallet	单托盘 single pallet
1.5	轴距 Wheel base	Wheel base	mm	2084	1569
1.6	操作类型 Operating type	Operating type		站驾式 Rider	
	车轮	Wheels			
2.1	轮子类型(前/后)	Wheels type		PU	
2.2	驱动轮/平衡轮/承重轮数量	Wheel quantity Driving wheel/Balance wheel /Bearing wheel		1/4/2(4)	
2.3	驱动轮尺寸	Driving wheel size	mm	Φ300×120	
2.4	平衡轮尺寸	Balance wheel size	mm	Φ115×55	
2.5	承重轮尺寸	Bearing wheel size	mm	Φ82×152	
	尺寸	Dimension			
3.1	货叉最低离地高度	Min.fork lowered height	mm	85	
3.2	货叉最大起升高度	Max.fork lifting height	mm	230	
3.3	最大起升行程	Max.lifting height	mm	145	
3.4	货叉外侧间距	Outside width between forks	mm	680	
3.5	货叉内侧间距	Inside width between forks	mm	180	220
3.6	货叉长度	Fork length	mm	2432	1212/1365/1517
3.7	货叉宽度	Fork width	mm	250	230
3.8	货叉厚度	Fork thickness	mm	60	
3.9	整车全长	Overall length	mm	3605	2374
3.10	车体宽度	Overall width	mm	930	
3.11	整车高度(含手柄)	Overall height(With handle)	mm	1536	
3.12	整车高度(不含手柄)	Overall height(Without handle)	mm	1280	
3.13	最小转弯半径	Min.Turning radius	mm	2708	2190
3.14	最小直角堆垛通道宽度 (托盘1200×1200)	Min.Aisle width for pallets 1200×1200	mm	3650	2536
	性能	Performance	mm		
4.1	最大行驶速度,满载/空载	Travel speed,laden/unladen	km/h	8/8	
4.2	最大起升速度,满载/空载	Lift speed,laden/unladen	mm/s	35/50	
4.3	最大下降速度,满载/空载	Lowering speed,laden/unladen	mm/s	35/30	
4.4	爬坡度,满载/空载	Gradeability,laden/unladen	%	3/6	
	电气配置	Electrical configuration			
5.1	驱动电机/起升电机/转向电机	Drive motor/ Lift motor/Steering motor	KW	AC4.2/DC2.2/DC0.15	
5.2	蓄电池电压/容量	Battery voltage / capacity	V/Ah	24/360	
5.3	制动	Brake		电磁/再生Electromagnetic /Regenerative	
5.4	控制器型号	Controller		ZAPI	
	重量	Weight			
6.1	蓄电池重量	Battery weight	kg	302	
6.2	自重(包含蓄电池)	Service weight with battery	kg	1190	1063

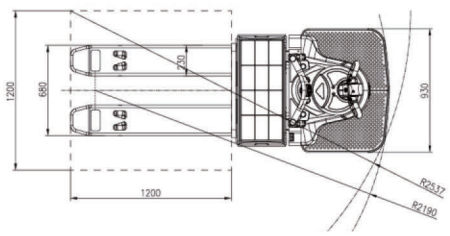

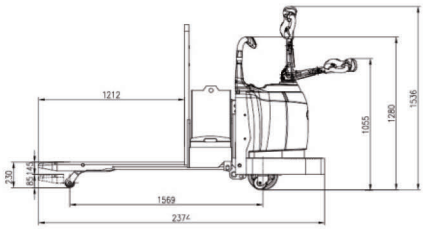

COMPANY CONTACT INFO
Website: www.e-rentals.cn
Address: 2837 Khalil Abu Al-Safa, 6976 Ar Rimal, Riyadh 13264

rentals

CDD10-060

电动托盘堆垛车 Electric stacker

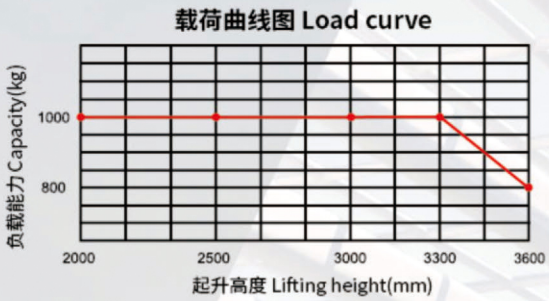



产品性能特点：

配置和性能

机械转向，舒适、经济、可靠；

高强度货叉；

交流驱动电机，低噪音，无碳刷、免维护；

起升自动限位，长寿命限位开关；

安全

驱动无级调速，安全，静音；

控制器多重自动保护系统；

紧急反向装置/紧急制动开关。

Characteristics:

Configuration and performance

Mechanical steering,comfortable,economic, reliable.

High strength forks.

AC driving system,low noise, without carbon brush and free maintenance.

Automatic lifting limit,limit switch,long life.

Safety

Stepless speed control system,safe and quiet.

Controller with multiple automatic protection.

Emergency reversing device / Emergency brake switch.

车型 Type	起升高度 Lift hight (mm)	门架类型 Mast type	货叉外侧间距 (mm) Outside width between legs	货叉内侧间距 (mm) Inside width between legs
CDD10-060	2000/2500/3000/3300/3600	两级标准/2- STAGE STD	550/600/650/685	180/230/280/315

CDD10-060

制造商和技术参数 Manufacturer's Data and Design Characteristics

	特性	Feature	单位	
1.1	型号	Model		CDD10
1.2	配置号	Configuration NO.		060
1.3	门架类型	Mast type		两级标准 2-stage
1.4	操作类型	Operating type		步行式 Walkie
1.5	额定载重	Load capacity	kg	1000
1.6	载荷中心距	Load center	mm	600
1.7	轴距	Wheel base	mm	1285
	车轮	Wheels		
2.1	轮子类型(前/后)	Wheels type		PU
2.2	驱动轮/平衡轮/承重轮 数量	Wheel quantity Driving wheel/Balance wheel /Bearing wheel		1/1/4
2.3	驱动轮尺寸	Driving wheel size	mm	Φ248x75
2.4	平衡轮尺寸	Balance wheel size	mm	Φ115x55
2.5	承重轮尺寸	Bearing wheel size	mm	Φ84x70
	尺寸	Dimension		
3.1	标准门架起升高度	Standard lift height	mm	2000/2500/3000/3300/3600
3.2	门架作业时整车最大高度	Max extend height	mm	2515/3015/3515/3815/4115
3.3	门架缩回时整车静态高度	Mast lowered height	mm	1560/1810/2060/2210/2360
3.4	货叉最低高度	Lowered fork height	mm	90
3.5	标准货叉规格(长/宽/厚)	Fork size(length/width/thickness)	mm	1150(1220)/185/55
3.6	整车全长	Overall length	mm	1898
3.7	车体宽度	Overall width	mm	806
3.8	货叉外侧间距	Outside width between forks	mm	550/600/650/685
3.9	货叉内侧间距	Intside width between forks	mm	180/230/280/315
3.10	最小转弯半径	Min.Turning radius	mm	1475
3.11	最小直角堆垛通道宽度 (托盘800×1200, 1200沿货叉放置)	Min.Aisle width for pallets 800×1200	mm	2045
3.12	最小直角堆垛通道宽度 (托盘1000×1200, 1200沿货叉放置)	Min.Aisle width for pallets 1000×1200	mm	2084
3.13	最小离地间隙	Min.ground clearance	mm	30
	性能	Performance		
4.1	最大行驶速度, 满载/空载	Travel speed,laden/unladen	km/h	3.5/4
4.2	最大起升速度, 满载/空载	Lift speed,laden/unladen	mm/s	120/180
4.3	最大下降速度, 满载/空载	Lowering speed,laden/unladen	mm/s	120/120
4.4	爬坡度, 满载/空载	Gradeability,laden/unladen	%	5/7
	电气配置	Electrical configuration		
5.1	驱动电机/起升电机	Drive motor / Lift motor	KW	AC0.95/DC2.0
5.2	蓄电池电压	Battery voltage	V	24
5.3	蓄电池容量	Battery capacity	Ah	210
5.4	制动	brake		电磁/再生 Electromagnetic/Regenerative
5.5	控制器型号	Controller		ZAPI
	重量	Weight		
6.1	蓄电池重量	Battery weight	Kg	192
6.2	自重 (包含蓄电池)	Service weight with battery	kg	913

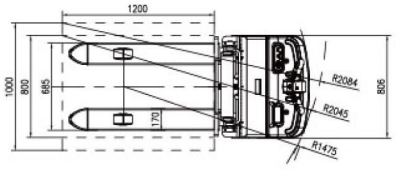

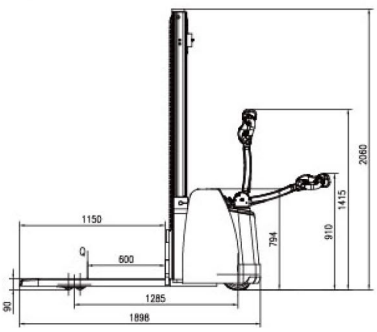

COMPANY CONTACT INFO
Website: www.e-rentals.cn
Address: 2837 Khalil Abu Al-Safa, 6976 Ar Rimal, Riyadh 13264

rentals

CDD10-070

电动托盘堆垛车 Electric stacker

载荷曲线图 Load curve

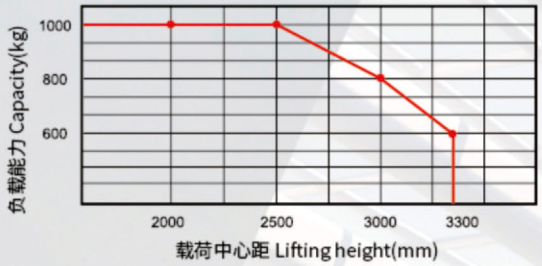

内置充电器

免维护电池



产品性能特点：

配置和性能

他励驱动电机，爬坡能力强；

高强度货叉；

标配内置充电器；

起升自动限位，长寿命限位开关；

安全

驱动无级调速，安全，静音；

控制器多重自动保护系统；

紧急反向装置/紧急制动开关。

Characteristics:

Configuration and performance

Separately excited motor,Strong climbling ability.

High strength forks.

Built-in charger is standard.

Automatic lifting limit,limit switch,long life.

Safety

Stepless speed control system,safe and quiet.

Controller with multiple automatic protection.

Emergency reversing device / Emergency brake switch.

车型 Type	起升高度 Lift hight (mm)	门架类型 Mast type	货叉外侧间距 (mm) Outside width between legs	货叉内侧间距 (mm) Inside width between legs
CDD10- 070	2000/2500/3000/3300	两级标准/2- STAGE STD	550/600/650/685	180/230/280/315

CDD10-070

制造商和技术参数 Manufacturer's Data and Design Characteristics

	特性	Feature	单位	
1.1	型号	Model		CDD10
1.2	配置号	Configuration NO.		070
1.3	门架类型	Mast type		两级标准 2-stage
1.4	操作类型	Operating type		步行式 Walkie
1.5	额定载重	Load capacity	kg	1000
1.6	载荷中心距	Load center	mm	600
1.7	轴距	Wheel base	mm	1150
	车轮	Wheels		
2.1	轮子类型(前/后)	Wheels type		PU
2.2	驱动轮/平衡轮/承重轮 数量	Wheel quantity Driving wheel/Balance wheel /Bearing wheel		1/1/4
2.3	驱动轮尺寸	Driving wheel size	mm	Φ252x67
2.4	平衡轮尺寸	Balance wheel size	mm	Φ115x55
2.5	承重轮尺寸	Bearing wheel size	mm	Φ84x70
	尺寸	Dimension		
3.1	标准门架起升高度	Standard lift height	mm	2000/2500/3000/3300
3.2	门架作业时整车最大高度	Max extend height	mm	2515/3015/3515/3815
3.3	门架缩回时整车静态高度	Mast lowered height	mm	1560/1810/2060/2210
3.4	货叉最低高度	Lowered fork height	mm	90
3.5	标准货叉规格(长/宽/厚)	Fork size(length/width/thickness)	mm	1150(1220)/185/55
3.6	整车全长	Overall length	mm	1733
3.7	车体宽度	Overall width	mm	790
3.8	货叉外侧间距	Outside width between forks	mm	550/600/650/685
3.9	货叉内侧间距	Intside width between forks	mm	180/230/280/315
3.10	最小转弯半径	Min.Turning radius	mm	1350
3.11	最小直角堆垛通道宽度 (托盘800×1200,1200沿货叉放置)	Min.Aisle width for pallets 800×1200	mm	1914
3.12	最小直角堆垛通道宽度 (托盘1000×1200,1200沿货叉放置)	Min.Aisle width for pallets 1000×1200	mm	1955
3.13	最小离地间隙	Min.ground clearance	mm	30
	性能	Performance		
4.1	最大行驶速度,满载/空载	Travel speed,laden/unladen	km/h	3/3.5
4.2	最大起升速度,满载/空载	Lift speed,laden/unladen	mm/s	120/180
4.3	最大下降速度,满载/空载	Lowering speed,laden/unladen	mm/s	120/120
4.4	爬坡度,满载/空载	Gradeability,laden/unladen	%	5/7
	电气配置	Electrical configuration		
5.1	驱动电机/起升电机	Drive motor / Lift motor	KW	DC0.63/DC2.0
5.2	蓄电池电压	Battery voltage	V	24
5.3	蓄电池容量	Battery capacity	Ah	85
5.4	制动	brake		电磁/再生 Electromagnetic/Regenerative
5.5	控制器型号	Controller		HELI(可选CURTIS)
	重量	Weight		
6.1	蓄电池重量	Battery weight	Kg	48
6.2	自重(包含蓄电池)	Service weight with battery	kg	604

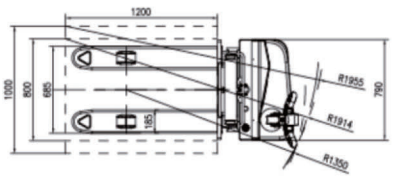

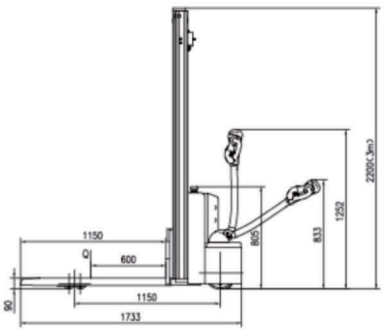

COMPANY CONTACT INFO
Website: www.e-rentals.cn
Address: 2837 Khalil Abu Al-Safa, 6976 Ar Rimal, Riyadh 13264

2Hours RENTALS INDUSTRIAL EQUIPMENT

E-rentals

CDD12/15-070E

电动托盘堆垛车 Electric Stacker

配置和性能

- 他励驱动电机，爬坡能力强；
- 高强度货叉；
- 标配内置充电机；
- 起升自动电限位，延长电机和电池寿命。

安全

- 驱动无极调速，安全、静音；
- 控制器多重自动保护系统；
- 紧急反向装置/紧急制动开关。

Configuration and performance

- Separately excited motor, strong climbing ability.
- High strength forks.
- Built-in charger is standard.
- Automatic lifting limit, long motor and battery life.

Safety

- Stepless speed control system, safe and quiet.
- Controller with multiple automatic protection.
- Emergency reversing device/Emergency brake switch.

载荷曲线图 Load Curve

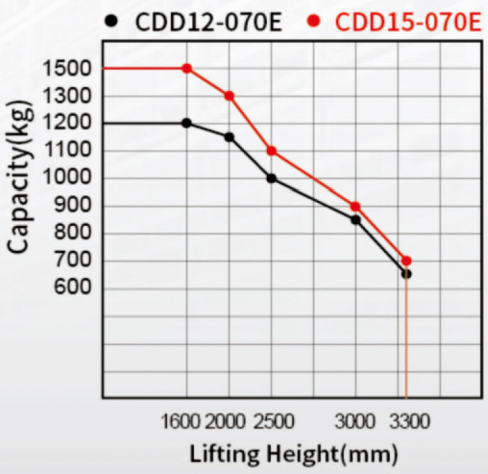



CDD12/15-070E

制造商和技术参数 Manufacturer's Data and Design Characteristics

	特性	Feature	单位		
1.1	车型	Model		CDD12-070E	CDD15-070E
1.2	操作类型	Operating type		步行式 waikle	
1.3	额定载重	Load capacity	kg	1200	1500
1.4	载荷中心距	Load center	c (mm)	600	
1.5	轴距	Wheel base	y (mm)	1150	1166
1.6	自重(包含蓄电池)	Service weight with battery	kg	616	676
1.7	控制器型号	Controller		HELI(可选/Option:CURTIS)	
	车轮	Wheels			
2.1	轮子类型(前/后)	Wheels type		聚氨酯 (PU)	
2.2	驱动轮/平衡轮/承重轮 数量	Wheel quantity Driving wheel/Balance wheel/Bearing wheel		1/1/4	
2.3	驱动轮尺寸	Driving wheel size	ϕxW	ϕ252x60	
2.4	平衡轮尺寸	Balance wheel size	ϕxW	ϕ115x55	
2.5	承重轮尺寸	Bearing wheel size	ϕxW	ϕ84x70	
	尺寸	Dimension			
3.1	标准门架起升高度	Standard lift height	h3 (mm)	2000/2500/3000/3300	
3.2	门架作业时整车最大高度	Max extend height	h4 (mm)	2515/3015/3515/3815	
3.3	门架缩回时整车静态高度	Mast lowered height	h1 (mm)	1560/1810/2060/2210	
3.4	货叉最低高度	Lowered fork height	h13 (mm)	90	
3.5	整车全长	Overall length	L(mm)	1733	1764
3.6	车体宽度	Overall width	b1(mm)	790	
3.7	标准货叉规格(长/宽/厚)	Fork size(length/width/thickness)	s/e/l (mm)	1150/185/55	
3.8	货叉外宽	Outside width between forks	b5(mm)	550/600/650/685	
3.9	最小转弯半径	Min.Turning radius	Wa (mm)	1350	1365
3.10	最小直角堆垛通道宽度 (托盘800×1200, 1200沿货叉放置)	Min.Aisle width for pallets 800×1200	Ast (mm)	1914	1930
3.11	最小直角堆垛通道宽度 (托盘1000×1200, 1200沿货叉放置	Min.Aisle width for pallets 1000×1200	Ast (mm)	1955	1970
	性能	Performance			
4.1	最大行驶速度,满载/空载	Travel speed,laden/unladen	km/h	3.6/4.3	3.5/4.0
4.2	最大起升速度,满载/空载	Lift speed,laden/unladen	mm/s	120/200	
4.3	最大下降速度,满载/空载	Lowering speed,laden/unladen	mm/s	100/90	105/102
4.4	爬坡度,满载/空载	Gradeability,laden/unladen	%	5/7	
	电气配置	Electrical configuration			
5.1	驱动电机/起升电机	Drive motor / Lift motor	KW	DC0.63/DC2.0	DC0.63/DC2.2
5.2	蓄电池电压	Battery voltage	V	24	
5.3	蓄电池容量	Battery capacity	Ah	85(选配105)	
5.4	蓄电池重量	Battery weight	Kg	48	
5.5	充电器规格	Charger specification		24V/10A	
	其他	Others			
6.1	噪音水平	Noise level	dB	≤69	
6.2	转向类型	Steering type		机械转向 mechanicalsteering	

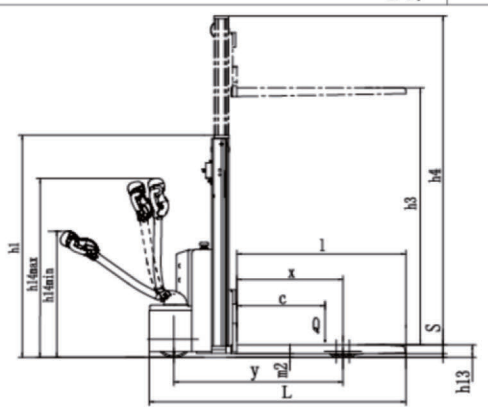

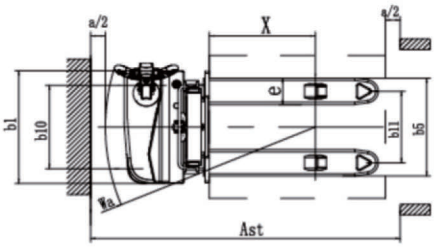

COMPANY CONTACT INFO
Website: www.e-rentals.cn
Address: 2837 Khalil Abu Al-Safa, 6976 Ar Rimal, Riyadh 13264

E-rentals

CDD16/20-070E

电动托盘堆垛车 Electric stacker

载荷曲线图 Load curve

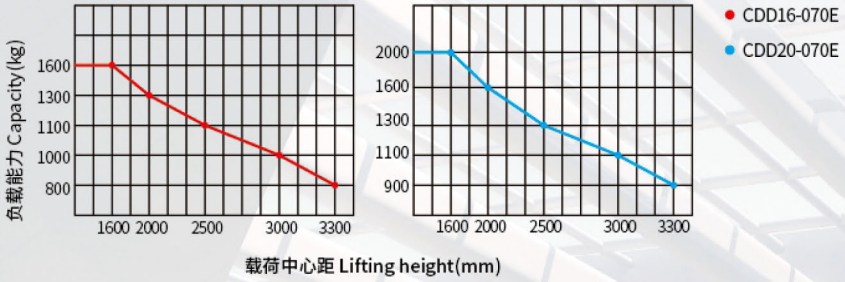



产品性能特点：

1.永磁无刷驱动电机，免维护，高效率，长寿命；
2.标配紧急开关和紧急反向安全装置；
3.标配平衡轮，提高行车稳定性；
4.标配起升限位开关，更安全、节能；
5.偏置驱动布局，视野广，安全性高。

Characteristics:

1.Permanent magnet brushless drive motor, maintenance-free, high efficiency, long life.
2.Standard configuration emergency stop switch and emergency reverse device ensure truck safety.
3.Standard balance wheel to improve driving stability.
4.Standard up limit switch, safer and energy saving.
5.Offset driven layout has a wide view and high security.

CDD16/20-070E

制造商和技术参数 Manufacturer' s Data and Design Characteristics					
	特性	Feature	单位		
1.1	型号	Model	—	CDD16-070E	CDD20-070E
1.2	操作类型	Operating type	—	步行式 Walkie	
1.3	额定载重	Load capacity	(kg)	1600	2000
1.4	载荷中心距	Load center	C(mm)	600	
1.5	轴距	Wheel base	y(mm)	1280	1300
	车轮	Wheels			
2.1	轮子类型(前/后)	Wheels type	—	PU	
2.2	驱动轮/平衡轮/承重轮数量	Wheel quantity Driving wheel /Balance wheel/Bearing wheel	—	1/2/4	
2.3	驱动轮尺寸	Driving wheel size	ϕ×W(mm)	Φ180×70	
2.4	平衡轮尺寸	Balance wheel size	ϕ×W(mm)	Φ115×55	
2.5	承重轮尺寸	Bearing wheel size	ϕ×W(mm)	Φ84×70	
	尺寸	Dimension			
3.1	标准门架起升高度	Standard lift height	h3(mm)	2500/3000/3300	
3.2	门架作业时整车最大高度	Max extend height	h2(mm)	3015/3515/3815	
3.3	门架缩回时整车静态高度	Mast lowered height	h1(mm)	1810/2060/2210	
3.4	货叉最低离地高度	Min.fork lowered height	h4(mm)	90	
3.5	货叉外侧间距	Outside width between forks	B5(mm)	550/600/650/685	
3.6	货叉内侧间距	Inside width between forks	(mm)	180/230/280/315	
3.7	标准货叉规格	Fork size(length/width/thickness)	l/e/s(mm)	1150/185/55	
3.8	整车全长	Overall length	L1(mm)	1875	1895
3.9	车体宽度	Overall width	B1(mm)	850	
3.10	最小转弯半径	Min.Turning radius	Wa(mm)	1612	1632
3.11	最小直角堆垛通道宽度(托盘800×1200,1200沿货叉放置)	Min.Aisle width for pallets 800×1200	Ast(mm)	2236	2256
3.12	最小直角堆垛通道宽度(托盘1000×1200,1200沿货叉放置)	Min.Aisle width for pallets 1000×1200	Ast(mm)	2304	2324
	性能	Performance			
4.1	最大行驶速度,满载/空载	Travel speed,laden/unladen	(km/h)	4.5/5	
4.2	最大起升速度,满载/空载	Lift speed,laden/unladen	(mm/s)	120/210	160/200
4.3	最大下降速度,满载/空载	Lowering speed,laden/unladen	(mm/s)	105/100	
4.4	爬坡度,满载/空载	Gradeability,laden/unladen	(%)	6/10	
	电气配置	Electrical configuration			
5.1	驱动电机/起升电机	Drive motor/ Lift motor	(kW)	AC1.2/DC2.2	AC1.2/DC3
5.2	蓄电池电压/容量	Battery voltage / capacity	(V/Ah)	24/210	
5.3	充电器规格	Charger specification	(V/A)	24/50	
5.4	控制器型号	Controller	—	HELI	
	重量	Weight			
6.1	蓄电池重量	Battery weight	(kg)	192	
6.2	自重(包含蓄电池)	Service weight with battery	(kg)	937	1035
	其他	Other			
7.1	噪音水平	Noise level	(dB(A))	≤69	
7.2	转向类型	Steering type	—	机械转向 Mechanical	
7.3	驱动控类型	Drive control type	—	两级(单油缸)	两级(双油缸)

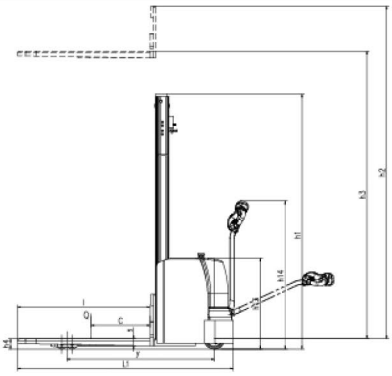

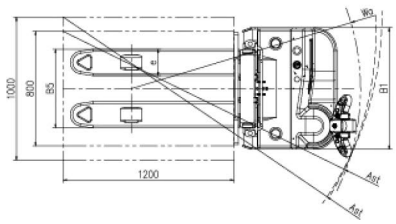

COMPANY CONTACT INFO
Website: www.e-rentals.cn
Address: 2837 Khalil Abu Al-Safa, 6976 Ar Rimal, Riyadh 13264

CDD10-080

电动托盘堆垛车 Electric stacker

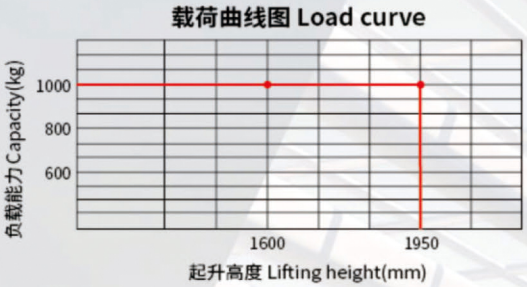

内置充电器

免维护电池



产品性能特点：

配置和性能

他励驱动电机，爬坡力强；

高强度货叉；

标配内置充电机；

起升自动电限位，延迟电机和电池寿命。

安全

驱动无级调速，安全、静音；

控制器多重自动保护系统；

紧急反向装置/紧急制动开关。

Characteristics:

Configuration and performance

Separately excited motor,strong climbing ability.

High strenght forks.

Built-in charger is standard.

Automatic lifting limit,motor and battery life extension.

Safety

Stepless speed control sysem,safe and quiet.

Controller with multiple automation protection.

Emergency reversing device/emergency brake switch.

车型 Type	起升高度 Lift hight (mm)	门架类型 Mast type	货叉外侧间距 (mm) Outside width between legs	货叉内侧间距 (mm) Inside width between legs
CDD10-080	1600/1950	单级 SINGLE STAGE	550/600/650/685	180/230/280/315

CDD10-080

制造商和技术参数 Manufacturer's Data and Design Characteristics

	特性	Feature	单位	
1.1	型号	Model		CDD10
1.2	配置号	Configuration NO.		080
1.3	门架类型	Mast type		单级 single stage
1.4	操作类型	Operating type		步行式 Walkie
1.5	额定载重	Load capacity	kg	1000
1.6	载荷中心距	Load center	mm	600
1.7	轴距	Wheel base	mm	1052
	车轮	Wheels		
2.1	轮子类型(前/后)	Wheels type		PU
2.2	驱动轮/平衡轮/承重轮 数量	Wheel quantity Driving wheel/Balance wheel /Bearing wheel		1/1/4
2.3	驱动轮尺寸	Driving wheel size	mm	Φ252x67
2.4	平衡轮尺寸	Balance wheel size	mm	Φ115x55
2.5	承重轮尺寸	Bearing wheel size	mm	Φ84x70
	尺寸	Dimension		
3.1	标准门架起升高度	Standard lift height	mm	1600/1950
3.2	门架作业时整车最大高度	Max extend height	mm	2055/2405
3.3	门架缩回时整车静态高度 Mast lowered height	Mast lowered height	mm	2055/2405
3.4	货叉最低高度	Lowered fork height	mm	90
3.5	标准货叉规格(长/宽/厚)	Fork size(length/width/thickness)	mm	1150(1220)/185/55
3.6	整车全长	Overall length	mm	1634
3.7	车体宽度	Overall width	mm	790
3.8	货叉外侧间距	Outside width between forks	mm	550/600/650/685
3.9	货叉内侧间距	Intside width between forks	mm	180/230/280/315
3.10	最小转弯半径	Min.Turning radius	mm	1262
3.11	最小直角堆垛通道宽度 (托盘800×1200,1200沿货叉放置)	Min.Aisle width for pallets 800×1200	mm	1841
3.12	最小直角堆垛通道宽度 (托盘1000×1200,1200沿货叉放置)	Min.Aisle width for pallets 1000×1200	mm	1883
3.13	最小离地间隙	Min.ground clearance	mm	30
	性能	Performance		
4.1	最大行驶速度,满载/空载	Travel speed,laden/unladen	km/h	3/3.5
4.2	最大起升速度,满载/空载	Lift speed,laden/unladen	mm/s	120/180
4.3	最大下降速度,满载/空载	Lowering speed,laden/unladen	mm/s	120/120
4.4	爬坡度,满载/空载	Gradeability,laden/unladen	%	5/7
	电气配置	Electrical configuration		
5.1	驱动电机/起升电机	Drive motor / Lift motor	KW	DC0.63/DC2.0
5.2	蓄电池电压	Battery voltage	V	24
5.3	蓄电池容量	Battery capacity	Ah	85
5.4	制动	brake		电磁/再生 Electromagnetic/Regenerative
5.5	控制器型号	Controller		HELI(可选CURTIS)
	重量	Weight		
6.1	蓄电池重量	Battery weight	Kg	48
6.2	自重(包含蓄电池)	Service weight with battery	kg	463

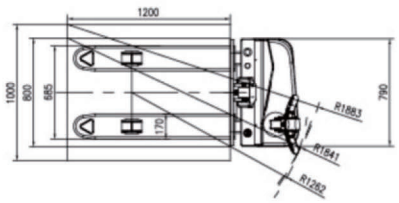

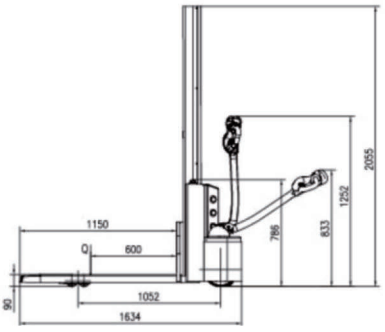

COMPANY CONTACT INFO
Website: www.e-rentals.cn
Address: 2837 Khalil Abu Al-Safa, 6976 Ar Rimal, Riyadh 13264

E-rentals

www.e-rentals.cn

CDD15-070ES

ELECTRIC STACKER

电动托盘堆垛车

LEAD ACID



载荷曲线图 Load curve

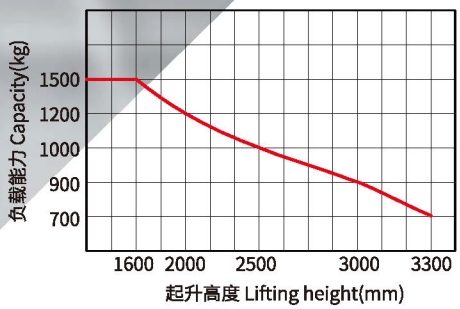

产品性能和特点:

- 动力强劲，爬坡能力强；
- 高强度货叉，C型+H型槽钢门架，高强度门架结实、耐用，不易变形；
- 门架标配高位限速开关，当门架起升高度超过1.5m，降低行驶速度，提供操作安全性；
- 起升自动限位，延长电机和电池寿命；
- 免维护电池，充电便捷；
- 手柄配置龟速开关，带直立行走功能，适用于窄通道转弯掉头；
- 门架标配铁网罩，保障了操作人员的安全；
- 标配紧急开关，可在意外发生时紧急断电；
- 手柄配置紧急反向安全装置，防止操作人员行驶时受到挤压伤害。

CHARACTERISTICS:

- Powerful performance, strong climbing ability;
- High-strength forks, C-section + H-section channel steel mast, robust and durable high-strength mast resistant to deformation;
- The mast comes standard with a height-activated speed limiter, which automatically reduces travel speed when lifting over 1.5m to enhance operational safety;
- Lift height limiter extends motor and battery service life;
- Maintenance-free battery with convenient charging;
- Handle features creep speed control with stand-on walk function, enabling precision maneuvering in narrow aisle turnarounds;
- The mast comes standard with a wire mesh guard, ensuring operator safety;
- The equipment comes standard with an emergency stop switch that instantly isolates power during emergencies;
- The equipment comes standard with an emergency stop switch that instantly isolates power during emergencies.

舒适·节能 COMFORT AND ENERGY SAVING | 稳定·可靠 STABLE AND RELIABLE | 智能·安全 INTELLIGENT SECURITY | 维修便捷 CONVENIENT MAINTENANCE

CDD15-070ES

	特性		单位 Unit	
1.1	型号	Model		CDD15-070ES
1.2	操作类型	Operating type		步行式 Walkie
1.3	额定载重	Load capacity	kg	1500
1.4	载荷中心距	Load center	mm	600
1.5	轴距	Wheel base	mm	1166
	车轮			
2.1	轮子类型(前/后)	Wheels type		PU
2.2	驱动轮/平衡轮/承重轮数量	Wheel quantity Driving wheel/Balance wheel /Bearing wheel		1/1/4
2.3	驱动轮尺寸	Driving wheel size	mm	Φ210×70
2.4	平衡轮尺寸	Balance wheel size	mm	Φ115×55
2.5	承重轮尺寸	Bearing wheel size	mm	Φ80×70
	尺寸			
3.1	标准门架起升高度	tandard lift height	mm	1600/2000/2500/3000/3300
3.2	门架作业时整车最大高度	Max extend height		1990/2450/2950/3450/3750
3.3	门架缩回时整车静态高度	Mast lowered height		1990/1490/1740/1990/2140
3.4	货叉最低离地高度	Min.fork lowered height	mm	90
3.5	货叉外侧间距	Outside width between forks	mm	550/600/650/685
3.6	货叉内侧间距	Inside width between forks	mm	230/280/330/365
3.7	标准货叉规格	Fork size (length/width/thickness)	mm	1150/160/70
3.8	整车全长	Overall length	mm	1755
3.9	车体宽度	Overall width	mm	790
3.10	最小转弯半径	Min.Turning radius	mm	1365
3.11	最小直角堆垛通道宽度(托盘800×1200，800沿货叉放置)	Min.Aisle width for pallets 800×1200	mm	1930
3.12	最小直角堆垛通道宽度(托盘1000×1200，1000沿货叉放置)	Min.Aisle width for pallets 1000×1200	mm	1970
	性能			
4.1	最大行驶速度，满载/空载	Travel speed,laden/unladen	km/h	4/4
4.2	最大起升速度，满载/空载	Lift speed,laden/unladen	mm/s	100/160
4.3	最大下降速度，满载/空载	Lowering speed,laden/unladen	mm/s	100/100
4.4	爬坡度，满载/空载	Gradeability,laden/unladen	%	5/7
	电气配置			
5.1	驱动电机/起升电机	Drive motor/ Lift motor	KW	DC0.75/DC2.2
5.2	蓄电池电压/容量	Battery voltage / capacity	V/Ah	24/85
5.3	充电器规格	Charger specification	V/A	24/10
	重量			
6.1	蓄电池重量	Battery weight	kg	50
6.2	自重(包含蓄电池)	Service weight with battery	kg	676
	其他			
7.1	噪音水平	Noise level	dB(A)	70
7.2	转向类型	Steering type		机械转向Mechanicalsteering

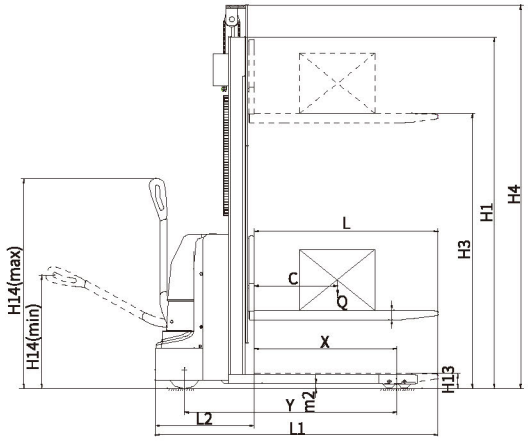

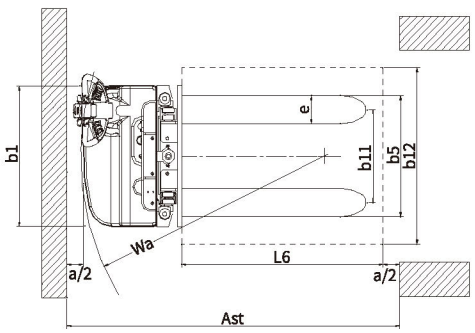

COMPANY CONTACT INFO
Website: www.e-rentals.cn
Address: 2837 Khalil Abu Al-Safa, 6976 Ar Rimal, Riyadh 13264

E-rentals

www.e-rentals.cn

CDD16/ 20-TF

ELECTRIC STACKER

电动托盘堆垛车

LEAD ACID



产品性能特点:

1.高强度货叉;2.C型+H型槽钢门架,高强度门架结实、耐用,不易变形;3.门架标配高位限速开关,当门架起升高度超过1.5m,降低行驶速度,提供操作安全性;4.起升自动限位,长寿命限位开关,标配1.8m限位;5.标配内置充电器、免维护电池,充电便捷;6.门架标配铁网罩,保障了操作人员的安全;7.48V永磁无刷驱动电机,免维护,效率高; 8.标配紧急开关,可在意外发生时紧急断电;9.手柄配置紧急反向安全装置,防止操作人员行驶时受到挤压伤害; 10.标配带绑定功能的刷卡管理系统;11.中置机械转向,标配保护臂、折叠踏板,操作便利。

CHARACTERISTICS: 1.High strength forks; 2.C-type+H-type channel steel frame, high-strength frame, sturdy and durable, not easily deformed; 3.The gantry is equipped with a high speed limit switch as standard. When the gantry height exceeds 1.5m, the driving speed is reduced to provide operational safety;4.Automatic lifting limit, long-life limit switch, standard 1.8m limit; 5.Standard built-in charger and maintenance free battery, convenient to charge;6.The standard iron mesh cover on the gantry ensures the safety of the operators;7.48V permanent magnet brushless drive motor, maintenance free, high efficiency;8.Equipped with an emergency switch, it can cut off power in case of an accident;9.The handle is equipped with an emergency reverse safety device to prevent operators from being crushed and injured while driving;10.Standard card swiping management system with binding function;11.Mid mounted mechanical steering, standard with protective arm and folding pedal, easy to operate.

舒适·节能 COMFORT AND ENERGY SAVING | 稳定·可靠 STABLE AND RELIABLE | 智能·安全 INTELLIGENT SECURITY | 维修便捷 CONVENIENT MAINTENANCE

CDD16/ 20-TF

	特性	Feature	单位		
1.1	型号	Model		CDD16-TF	CDD20-TF
1.2	操作类型	Operating type		站架式 Stand on	站架式 Stand on
1.3	额定载重	Load capacity	kg	1600	2000
1.4	载荷中心距	Load center	mm	600	600
1.5	轴距	Wheel base	mm	1145	1145
	车轮	Wheels			
2.1	轮子类型(前/后)	Wheels type		PU	PU
2.2	驱动轮/平衡轮/承重轮数量	Wheel quantity		1/2/4	1/2/4
2.3	驱动轮尺寸	Driving wheel size	mm	Φ195×70	Φ195×70
2.4	平衡轮尺寸	Balance wheel size	mm	Φ116×55	Φ116×55
2.5	承重轮尺寸	Bearing wheel size	mm	Φ73×60	Φ73×60
	尺寸	Dimension			
3.1	标准门架起升高度	Standard lift height	mm	3000/3500/4000	3000/3500/4000
3.2	门架作业时整车最大高度	Max extend height	mm	3472/3972/4472	3472/3972/4472
3.3	门架缩回时整车静态高度	Mast lowered height	mm	2012/2262/2512	2012/2262/2512
3.4	货叉最低离地高度	Min.fork lowered height	mm	83	83
3.5	货叉外侧间距	Outside width between forks	mm	550/600/650/685	550/600/650/685
3.6	货叉内侧间距	Inside width between forks	mm	180/230/280/315	180/230/280/315
3.7	标准货叉规格	Fork size (length/width	mm	1150/185/60	1150/185/60
3.8	整车全长(踏板放下/踏板收起)	Overall length	mm	2214/1812	2214/1812
3.9	车体宽度	Overall width	mm	780	780
3.10	最小转弯半径	Min.Turning radius	mm	1393	1393
3.11	最小直角堆垛通道宽度(托盘800×1200,1200沿货叉放置)	Min.Aisle width for pallets 800×1200	mm	2224	2224
3.12	最小直角堆垛通道宽度(托盘1000×1200,1200沿货叉放置)	Min.Aisle width for pallets 1000×1200	mm	2291	2291
	性能	Performance			
4.1	最大行驶速度,满载/空载	Travel speed,laden/unladen	km/h	4.2/5	4.2/5
4.2	最大起升速度,满载/空载	Lift speed,laden/unladen	mm/s	116/165	105/165
4.3	最大下降速度,满载/空载	Lowering speed,laden/unladen	mm/s	105/95	120/100
4.4	爬坡度,满载/空载	Gradeability,laden/unladen	%	6/10	6/10
	电气配置	Electrical configuration			
5.1	驱动电机/起升电机	Drive motor/ Lift motor		BLDC1.0/DC2.2	BLDC1.2/DC2.2
5.2	蓄电池电压/容量	Battery voltage / capacity	V/Ah	48/65	48/65
5.3	充电器规格	Charger specification	V/Ah	48/8	48/8
5.4	控制器型号	Controller		HELI(合力)	HELI(合力)
5.5	制动	Brake		电磁/再生 Electromagnetic/Regenerative	
	重量	Weight			
6.1	蓄电池重量	Battery weight		15×4	15×4
6.2	自重(包含蓄电池)	Service weight with battery		710	725
	其他	Other			
7.1	转向类型	Steering type		机械转向 Mechanical	机械转向 Mechanical

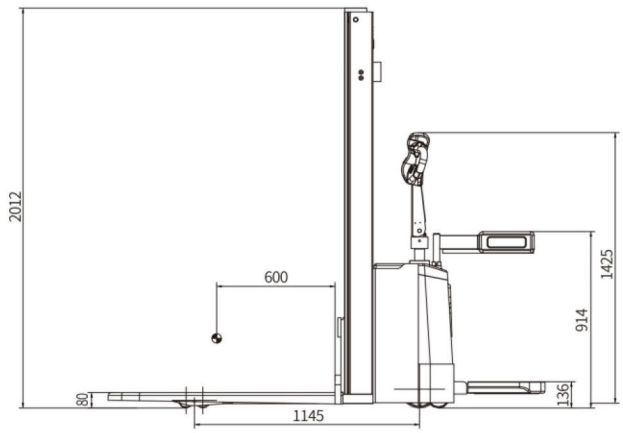

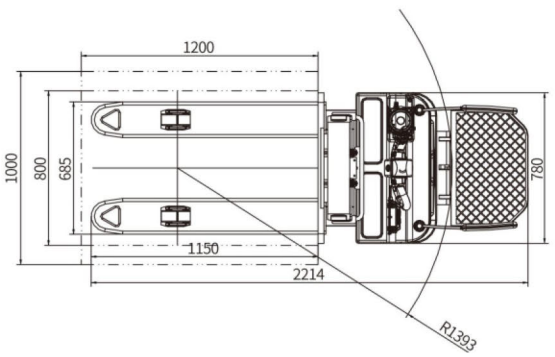

COMPANY CONTACT INFO
Website: www.e-rentals.cn
Address: 2837 Khalil Abu Al-Safa, 6976 Ar Rimal, Riyadh 13264

E-rentals

www.e-rentals.cn

CDD16-D930/950/350
CDD20-D930

电动托盘堆垛车
ELECTRIC STACKER

LEAD ACID & LI-ION



载荷曲线图 Load curve

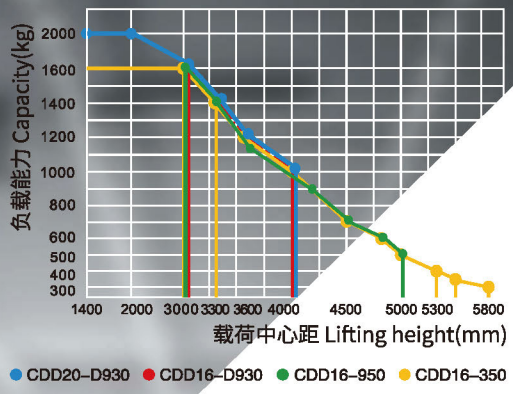

产品性能特点:

配置和性能 电子助力转向，轻便，静音；双路下降电磁阀，三种下降速度模式；交流驱动电机，无碳刷，免维护；起升自动限位，长寿命接近开关；驱动单元专利设计浮动增力机构；

安全 转弯自动减速功能，更安全；货叉高货位，车辆行驶自动降速；驱动器无级调速，安全，静音；控制器多重自动保护系统；紧急反向装置/紧急制动开关。锂电款采用磷酸铁锂电池，充电快，效率高。

CHARACTERISTICS:

Configuration and performance

Electronic power steering system,light and low noise. Two-way magnetic valve,three drop speed mode. AC driving motor, without carbon brush and free maintenance. Automatic lifting limit,proximity switch,long life. Drive unit floating bodies with patent design.

Safety

Curve automatic deceleration,more safe. Goods high position,vehicle automatic reduction. Stepless speed control system,safe and quiet. Controller with multiple automatic protection. Emergency reversing device / Emergency brake switch. The LFP model lithium batteries are fast charging and efficient.

车型 Type	起升高度 Lift hight (mm)	门架类型 Mast type	货叉外侧间距 (mm) Outside width between legs	货叉内侧间距 (mm) Inside width between legs
CDD16- D930	1400/2000/2500/3000/3300/3600/4000	两级标准/2- STAGE STD	550/600/650/685	180/230/280/315
CDD16- 950	3700/3900/4200/4500/4700/5000	三级全自由/FULL FREE 3- STAGE STD		
CDD16- 350	5300/5500/5800	三级全自由/FULL FREE 3- STAGE STD		
CDD20- D930	1400/2000/2500/3000/3300/3600/4000	两级标准/2- STAGE STD	650/685	280/315

CDD20系列，起升高度在2m以内载荷2000kg；
CDD20系列，货叉外侧间距必须≥650mm。

CDD20 serios,lift height ≤ 2000mm,load capacity is 2000kg.
CDD20 serios,outside with between forks ≥ 650mm.

充电快速 FAST AND CHARGING | 稳定·可靠 STABLE AND RELIABLE | 简洁·灵巧 SIMPLE AND DEXTEROUS | 维修便捷 CONVENIENT MAINTENANCE

CDD16-D930/950/350
CDD20-D930

	特性	Feature	单位				
1.1	型号	Model		CDD16	CDD16	CDD16	CDD20
1.2	配置号	Configuration NO.		D930	950	350	D930
1.3	门架类型	Mast type		两级标准 2-stage	三级全自由 Full free 3-stage		两级标准2-stage
1.4	操作类型	Operating type		步行式/乘驾式 Walkie/Stand On			
1.5	额定载重	Load capacity	kg	1600			2000
1.6	载荷中心距	Load center	mm	600			
1.7	轴距	Wheel base	mm	1325	1375		1325
	车轮	Wheels					
2.1	轮子类型(前/后)	Wheels type		PU			
2.2	驱动轮/平衡轮/承重轮 数量	Wheel quantity Driving wheel/Balance wheel /Bearing wheel		1/2/4			
2.3	驱动轮尺寸	Driving wheel size	mm	Φ248x75			
2.4	平衡轮尺寸	Balance wheel size	mm	Φ115x55			
2.5	承重轮尺寸	Bearing wheel size	mm	Φ84x70			
	尺寸	Dimension					
3.1	标准门架起升高度	Standard lift height	mm	1400/2000/2500/3000 /3300/ 3600/4000	3700/3900/4200 / 4500/4700/5000	5300/5500/ 5800	1400/2000/2500/3000 /3300/ 3600/4000
3.2	门架作业时整车最大高度	Max extend height	mm	1900/2500/3000/3500 /3800/4100/4500	4200/4400/4700 /5000/5200/5500	5800/6000/6300	1900/2500/3000/3500 /3800/4100/4500
3.3	门架缩回时整车静态高度	Mast lowered height	mm	1185/1535/1765/1980 /2135/ 2335/2500	1800/1900/1985 /2085/2135/2235	2520/2590/ 2690	1185/1535/1765/1980 /2135/ 2335/2500
3.4	自由提升高度	free lifting height	mm	-	1335/1448/1520 / 1620/1670/1770	2074/2134/2234	-
3.5	货叉最低高度	Lowered fork height	mm	90			
3.6	标准货叉规格(长/宽/厚)	Fork size(length/width/thickness)	mm	1150(1220)/185/55			
3.7	整车全长，踏板收起/放下	Overall length	mm	2050/2470	2105/2525		2050/2470
3.8	车体宽度	Overall width	mm	856	957		856
3.9	最小转弯半径，踏板收起/放下	Min.Turning radius	mm	1580/1990	1595/2010		1580/1990
3.10	最小直角堆垛通道宽度 (托盘800×1200，1200沿货叉放置)	Min.Aisle width for pallets 800×1200	mm	2180/2580	2230/2625		2180/2580
3.11	最小直角堆垛通道宽度 (托盘1000×1200，1200沿货叉放置)	Min.Aisle width for pallets 1000×1200	mm	2210/2600	2260/2650		2210/2600
3.12	最小离地间隙	Min.ground clearance	mm	30			
	性能	Performance					
4.1	最大行驶速度，满载/空载	Travel speed,laden/unladen	km/h	6/6			
4.2	最大起升速度，满载/空载	Lift speed,laden/unladen	mm/s	130/180			
4.3	最大下降速度，满载/空载	Lowering speed,laden/unladen	mm/s	100/200	100/160		100/200
4.4	爬坡度，满载/空载	Gradeability,laden/unladen	%	6/8			
	电气配置	Electrical configuration					
5.1	驱动电机/起升电机/转向电机	Drive motor/ Lift motor/Steering motor	KW	AC1.5/DC3/BLDC0.3			
5.2	制动	Brake		电磁/再生Electromagnetic/Regenerative			
	电池	Battery		铅酸电池 Lead-acid battery	锂电池 Lithium battery (optional)	铅酸电池 Lead-acid battery	锂电池 Lithium battery (optional)	铅酸电池 Lead-acid battery	锂电池 Lithium battery (optional)	铅酸电池 Lead-acid battery	锂电池 Lithium battery (optional)
6.1	电池电压/容量	Battery voltage/capacity	V/Ah	24/280	24/200	24/280	24/200	24/280	24/200	24/280	24/200
6.2	控制器	Controlller		ZAPI	ZAPI	ZAPI	ZAPI	ZAPI	ZAPI	ZAPI	ZAPI
6.3	电池重量	Battery	kg	235	99	235	99	235	99	235	99
6.4	自重(包含电池)	Service weight (with battery)	kg	1213	1109	1585	1388	1649	1468	1213	1077

COMPANY CONTACT INFO
Website: www.e-rentals.cn
Address: 2837 Khalil Abu Al-Safa, 6976 Ar Rimal, Riyadh 13264
2 Hours RENTALS INDUSTRIAL EQUIPMENT

E-rentals

www.e-rentals.cn

CDD16/20-URD(931)

电动托盘堆垛车
ELECTRIC STACKER



充电快速 FAST AND CHARGING | 稳定·可靠 STABLE AND RELIABLE | 简洁·灵巧 SIMPLE AND DEXTEROUS | 维修便捷 CONVENIENT MAINTENANCE

CDD16/20-URD(931)

型号	Model		CDD16/20-URD(931)	
门架类型	Mast Type		2-Stage mast	Full free 3-Stage mast
额定载重	Load Capacity	kg	2000	
载荷中心距	Load Center	mm	600	
操作类型	Operating Type		站架式 Stand on	
轮子类型(前/后)	Wheels Type		PU	
标准门架起升高度	Standard Lift Height	mm	2500/3000/3200/3500/3800/4000/4200/4500/4700	4200/4400/4700/5000/5200/5500/5800/6000
门架作业时整车最大高度	Max Extend Height	mm	1535/1765/1865/1980/2135/2285/2400/2500/2650	1800/1900/1985/2085/2135/2235/2520/2590
货叉规格 标准货叉规格(长/宽/厚)	Fork Size(Length/width/thickness)	mm	1150/185/60	
整车全长	Overall Length	mm	2475	
车体宽度	Overall Width	mm	850	
最小转弯半径	Min.turning Radius	mm	1680	
最小直角堆垛通道宽度(托盘800×1200,1200沿货叉放置)	Min.aisle Width For Pallets 800×1200	mm	2283	
最小直角堆垛通道宽度(托盘1000×1200,1000沿货叉放置)	Min.aisle Width For Pallets 1000×1200	mm	2353	
最大行驶速度,满载/空载	Travel Speed,laden/unladen	km/h	6/6	
最大起升速度,满载/空载	Lift Speed,laden/unladen	mm/s	130/180	
爬坡度,满载/空载	Gradeability,laden/unladen	%	6/8	
驱动电机/起升电机	Drive Motor/ Lift Motor	KW	24/200(Lithium battery)	
铅酸蓄电池电压/容量	Lead-acid Battery Voltage / Capacity	V/Ah	AC1.5/DC3.0	
控制器	Controls		QEXPEND	
蓄电池重量	Battery Weight	kg	105(Lithium battery)	105(Lithium battery)
自重(包含蓄电池)	Service Weight With Battery	kg	1510(Lithium battery)	1880(Lithium battery)

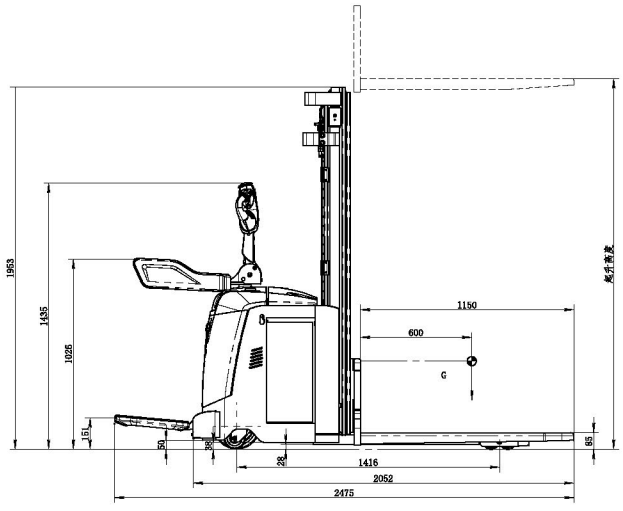

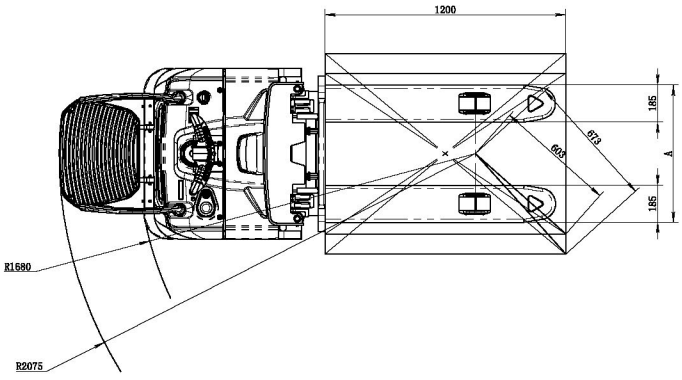

COMPANY CONTACT INFO
Website: www.e-rentals.cn
Address: 2837 Khalil Abu Al-Safa, 6976 Ar Rimal, Riyadh 13264

E-rentals

www.e-rentals.cn

CDD15D-SF

DUAL LIFT STACKER

双起升堆高车

LEAD ACID

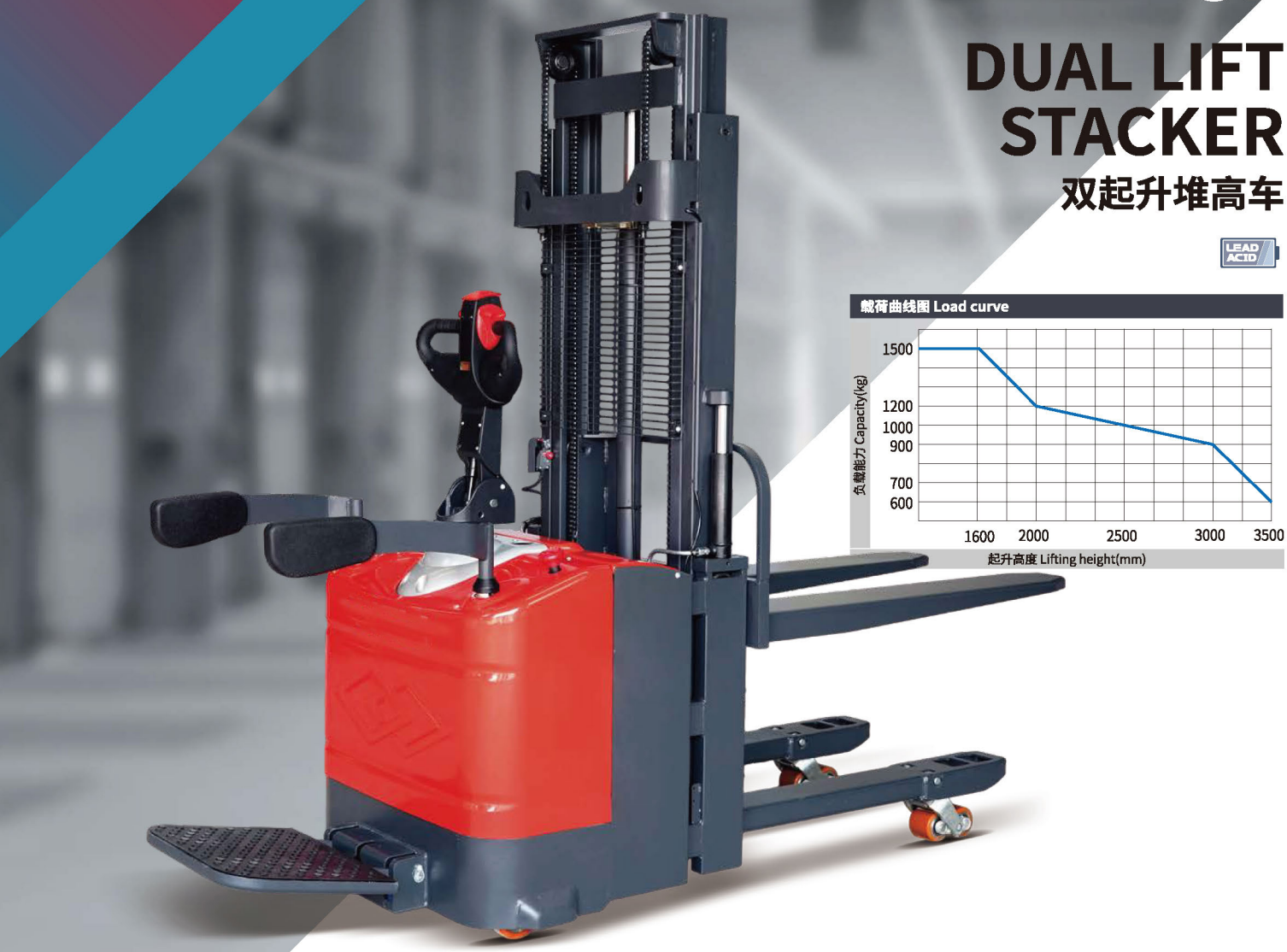

产品性能特点: 双货叉设计可同时搬运两个货物，显著提升作业效率。通过性好，支撑腿可起升，空载时最大可通过20%的坡度，提升越障能力。可靠性强，起升机构采用拉杆结构，安全可靠，使用寿命长，提高整车稳定性。整车门架起升时采用双油缸双导轨结构，侧向无间隙，增加整车稳定性。性能强劲，采用48V大功率免维护电机，动力强劲，过载性能好。门架采用高强度叉车专用特型钢，刚性好，精度高，不易变形。驱动单元专利设计浮动机构。弯道自动减速功能，更安全。踏板具有良好的避震功能，操作舒适，保障驾驶人员的安全。整车维护保养简单方便。整车小巧灵活，适合在狭窄的空间及通道搬运堆垛作业。集成化的操控手柄设计符合人机工程原理，操作舒适可靠。

CHARACTERISTICS: The dual forks design allows for handling two goods simultaneously, thus significantly enhancing operational efficiency.Excellent passability, with the support legs capable of lifting, enabling the equipment to negotiate gradients up to 20% when unloaded, thereby enhancing obstacle-crossing capability.Boasting exceptional reliability, the lifting mechanism employs a tie-rod structure that ensures safety and reliability while extending service life, thereby enhancing overall stability. The entire mast lifting system utilizes a dual-cylinder and dual-guide rail configuration featuring zero lateral play, further increasing vehicle stability.Delivering robust performance, the equipment features a 48V high-power maintenance-free motor that provides prime driving force and exceptional overload capacity. The mast utilizes special-section, high-strength forklift-grade steel, ensuring superior structural integrity, dimensional accuracy, and deformation resistance.Drive unit with proprietary floating mechanism design.Automatic curve deceleration function for enhanced safety.The pedal assembly features advanced vibration damping with optimized ergonomic comfort, ensuring enhanced operator protection.The entire vehicle features streamlined maintenance procedures with simplified serviceability.The compact and agile vehicle excels in confined spaces and narrow aisles for material handling and stacking operations.The integrated control handle design adheres to ergonomic principles, delivering comfortable and fail-safe operation.

舒适·节能 COMFORT AND ENERGY SAVING | 稳定·可靠 STABLE AND RELIABLE | 智能·安全 INTELLIGENT SECURITY | 维修便捷 CONVENIENT MAINTENANCE

CDD15D -SF

	特性	Feature			
1.01	型号	Model		CDD15D	
1.02	配置号	Configuration No.		SF	
1.03	门架类型	Mast Type		一级Single Stage	二级2-Stage STD
1.04	额定载重	Load Capacity	kg	1500	
1.05	载荷中心距	Load Center	mm	600	
1.06	轴距	Wheel Base	mm	1400	
1.07	操作类型	Operating Type		站架式 Stand on	
	车轮	Wheels			
2.01	轮子类型(前/后)	Wheels Type		PU	
2.02	驱动轮/平衡轮/承重轮数量	Wheel Quantity Driving Wheel/balance Wheel /bearing Wheel		1/2/4	
2.03	驱动轮尺寸	Driving Wheel Size	mm	Φ230×75	
2.04	承重轮尺寸	Bearing Wheel Size	mm	Φ80×70(双轮/Double wheels)	
2.05	平衡轮尺寸	Balance Wheel Size	mm	Φ115×55	
	尺寸	Dimension			
3.01	货叉最低离地高度	Min.fork Lowered Height	mm	90	
3.02	标准门架起升高度	Standard Lift Height	mm	1600	2000/2500/3000/3500
3.03	门架作业时整车最大高度	Max Extend Height	mm	1990	2450/2950/3450/3950
3.04	门架缩回时整车静态高度	Mast Lowered Height	mm	1990	1490/1740/1990/2240
3.05	货叉规格 标准货叉规格(长/宽/厚)	Fork Size(Length/width/thickness)	mm	1150/180/70	
3.06	货叉外侧间距	Outside Width Between Forks	mm	690/590	
3.07	货叉内侧间距	Inside Width Between Forks	mm	330/230	
3.08	支腿提升高度	Outrigger Lifting Height	mm	120	
3.09	整车全长	Overall Length	mm	2040/2475	
3.10	车体宽度	Overall Width	mm	800	
3.11	最小转弯半径	Min.turning Radius	mm	1580/1990	
3.12	最小直角堆垛通道宽度(托盘800×1200,1200沿货叉放置)	Min.aisle Width For Pallets 800×1200	mm	2290/2725	
3.13	最小直角堆垛通道宽度(托盘1000×1200,1000沿货叉放置)	Min.aisle Width For Pallets 1000×1200	mm	2240/2675	
	性能	Performance			
4.01	最大行驶速度,满载/空载	Travel Speed,laden/unladen	km/h	4/4	
4.02	最大起升速度,满载/空载	Lift Speed,laden/unladen	mm/s	120/140	
4.03	最大下降速度,满载/空载	Lowering Speed,laden/unladen	mm/s	140/120	
4.04	爬坡度,满载/空载	Gradeability,laden/unladen	%	8/10	
	电气配置	Electrical Configuration			
5.01	驱动电机/起升电机	Drive Motor/ Lift Motor	KW	BLDC0.9/DC2.2	
5.02	铅酸蓄电池电压/容量	Lead-acid Battery Voltage / Capacity	V/Ah	48/85(标配) (Standard)	
5.03	铅酸充电器规格	Lead-acid Charger Specifications	V/A	48/10(标配) (Standard)	
	重量	Weight			
6.01	蓄电池重量	Battery Weight	kg	100	
6.02	自重(包含蓄电池)	Service Weight With Battery	kg	790	
	其他	Others			
7.01	噪音水平	Noise Level	dB(A)	≤70	
7.02	转向类型	Steering Type		机械转向 Mechanical	

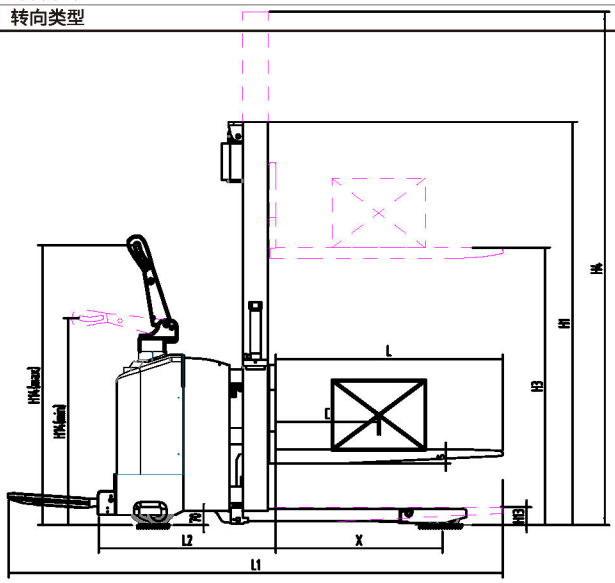

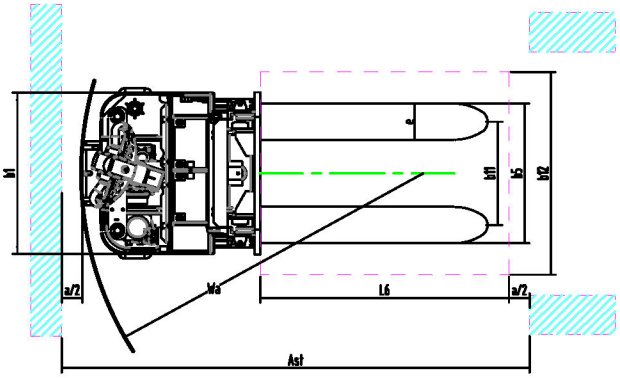

COMPANY CONTACT INFO
Website: www.e-rentals.cn
Address: 2837 Khalil Abu Al-Safa, 6976 Ar Rimal, Riyadh 13264

CPD06-970

平衡重式电动托盘堆垛车
Counterbalanced electric stacker

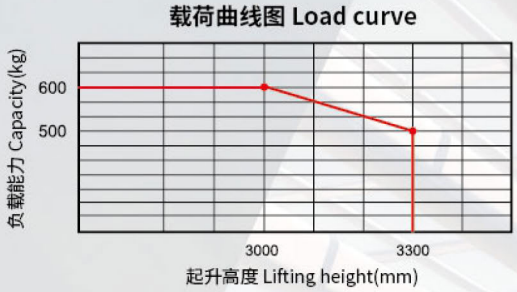



产品性能特点：

配置和性能

短轴距，更灵活；
电子助力转向，轻便、静音；
双路电磁阀，三种下降速度模式；
交流驱动，无碳刷、免维护；
意大利ZAPI驱动控制器；
电磁、再生制动系统；
起升自动限位，长寿命接近开关。

安全

弯道自动减速装置，更安全；
货叉高货位，车辆行驶自动减速；
驱动无级调速，安全、静音；
控制器多重自动保护系统；
紧急反向装置/紧急制动开关。

Characteristics:

Configuration and performance

Short wheelbase and more flexible.
Electronic power steering sysem,light and low noise.
Two-way magnetic valve,three drop speed mode.
Italy ZAPI driving controller.
Electromagnetic,regenerative braking system.
Automatic lifting limit,proximity switch,long life.

Safety

Curve automatic deceleration devices,more safe.
Goods high position,vahicle automatic deceleration.
Stepless speed control system,safe and quiet.
Controller with multiple automatic protection.
Emergency reversing device/emergency brake switch.

车型 Type	起升高度 Lift hight (mm)	门架类型 Mast type	叉腿外侧间距 (mm) Outside width between legs	叉腿内侧间距 (mm) Inside width between legs
CPD06-970	1400/2000/2500/3000/3300	两级标准/2- STAGE STD	200-660	0-460

CPD06-970

制造商和技术参数 Manufacturer's Data and Design Characteristics				
	特性	Feature	单位	
1.1	型号	Model		CPD06
1.2	配置号	Configuration NO.		970
1.3	门架类型	Mast type		两级标准 2-stage
1.4	操作类型	Operating type		步行式/乘驾式 Walkie/Stand On
1.5	额定载重	Load capacity	kg	600
1.6	载荷中心距	Load center	mm	500
1.7	轴距	Wheel base	mm	794
	车轮	Wheels		
2.1	轮子类型(前/后)	Wheels type		PU
2.2	驱动轮/平衡轮/承重轮 数量	Wheel quantity Driving wheel/Balance wheel /Bearing wheel		1/0/2
2.3	驱动轮尺寸	Driving wheel size	mm	Φ248x75
2.4	平衡轮尺寸	Balance wheel size	mm	———
2.5	承重轮尺寸	Bearing wheel size	mm	Φ160x76
	尺寸	Dimension		
3.1	标准门架起升高度	Standard lift height	mm	1400/2000/2500/3000/3300
3.2	门架作业时整车最大高度	Max extend height	mm	2400/3000/3500/4000/4300
3.3	门架缩回时整车静态高度	Mast lowered height	mm	1230/1580/1780/2030/2130
3.4	货叉最低高度	Lowered fork height	mm	55
3.5	标准货叉规格(长/宽/厚)	Fork size(length/width/thickness)	mm	1070/100/40
3.6	整车全长,踏板收起/放下	Overall length	mm	2240/2660
3.7	车体宽度	Overall width	mm	1015
3.8	货叉外侧间距	Outside width between forks	mm	200-660
3.9	货叉内侧间距	Intside width between forks	mm	0-460
3.10	最小转弯半径,踏板收起/放下M	Min.Turning radius	mm	971/1436
3.11	最小直角堆垛通道宽度 (托盘800×1200,1200沿货叉放置)	Min.Aisle width for pallets 800×1200	mm	2095/2474
3.12	最小直角堆垛通道宽度 (托盘1000×1200,1200沿货叉放置)	Min.Aisle width for pallets 1000×1200	mm	2282/2662
3.13	最小离地间隙	Min.ground clearance	mm	80
	性能	Performance		
4.1	最大行驶速度,满载/空载	Travel speed,laden/unladen	km/h	5/5.5
4.2	最大起升速度,满载/空载	Lift speed,laden/unladen	mm/s	130/230
4.3	最大下降速度,满载/空载	Lowering speed,laden/unladen	mm/s	130/230
4.4	爬坡度,满载/空载	Gradeability,laden/unladen	%	5/7
	电气配置	Electrical configuration		
5.1	驱动电机/起升电机/转向电机	Drive motor / Lift motor/Steering motor	KW	AC1.5/DC3/DC0.15
5.2	蓄电池电压	Battery voltage	V	24
5.3	蓄电池容量	Battery capacity	Ah	270
5.4	制动	brake		电磁/再生 Electromagnetic/Regenerative
5.5	控制器型号	Controller		ZAPI
	重量	Weight		
6.1	蓄电池重量	Battery weight	Kg	247
6.2	自重(包含蓄电池)	Service weight with battery	kg	1561

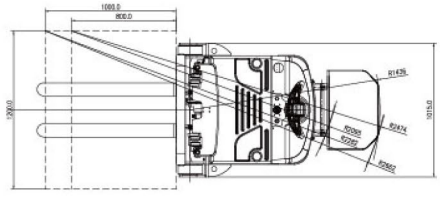

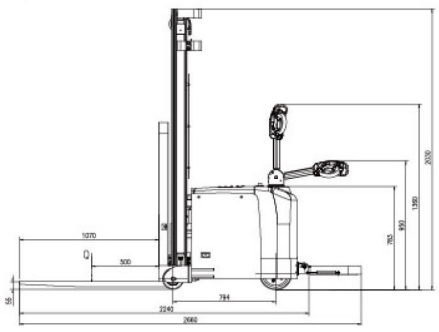

COMPANY CONTACT INFO
Website: www.e-rentals.cn
Address: 2837 Khalil Abu Al-Safa, 6976 Ar Rimal, Riyadh 13264

CPD12-970/910
CPD16-D970/970

平衡重式电动托盘堆垛车 Counterbalanced stacker

载荷曲线图 Load curve

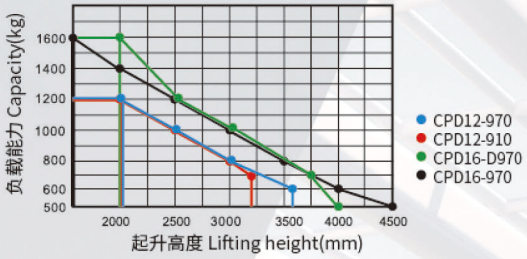



产品性能特点：

配置和性能

电子助力转向，轻便、静音；
双路电磁阀，三种下降速度模式；
交流驱动，无碳刷、免维护；
意大利ZAPI驱动控制器；
电磁、再生制动系统；
起升自动限位，长寿命接近开关。

安全

弯道自动减速装置，更安全；
货叉高货位，车辆行驶自动减速；
驱动无级调速，安全、静音；
控制器多重自动保护系统；
紧急反向装置/紧急制动开关；
高货位车辆行驶自动减速。
锂电款采用磷酸铁锂电池，充电快，效率高。

Characteristics:

Configuration and performance

Electronic power steering sysem,light and low noise.
Two-way magnetic valve,three drop speed mode.
AC Driving system,No carbon brush,maintenance free.
Italy ZAPI driving controller.
Electromagnetic,regenerative braking system.
Automatic lifting limit,proximity switch,long life.

Safety

Curve automatic deceleration devices,more safe.
Goods high position,vahicle automatic deceleration.
Stepless speed control system,safe and quiet.
Controller with multiple automatic protection.
Emergency reversing device/emergency brake switch.
Hight position automatic reduction device.
The LFP model lithium batteries are fast charging and efficient.

车型 Type	起升高度 Lift hight (mm)	门架类型 Mast type	选配 Option
CPD12-970	1400/2000/2500/3000/3300/3600	两级标准/2- STAGE STD	货叉倾斜/TILTINGT DEVICE
CPD12-910	2500/3000/3300	两级全自由/FULL FREE 2- STAGE STD	不可选
CPD16-D970	1400/2000/2500/3000/3300/3600/4000	两级标准/2- STAGE STD	货叉倾斜/TILTINGT DEVICE
CPD16-970	3700/3900/4200/4500	三级全自由/FULL FREE 3- STAGE STD	货叉倾斜/TILTINGT DEVICE

CPD12-970/910 CPD16-D970/970

制造商和技术参数 Manufacturer's Data and Design Characteristics

	特性	Feature	单位							
1.1	型号	Model		CPD12		CPD12		CPD16		CPD16	
1.2	配置号	Configuration NO.		970		910		D970		970	
1.3	门架类型	Mast type		两级标准 2-stage		两级全自由 Full free 2-stage		两级标准 2-stage		三级全自由 Full free 3-stage	
1.4	操作类型	Operating type		步行式/乘驾式 Walkie/Stand On							
1.5	额定载重	Load capacity	kg	1200				1600			
1.6	载荷中心距	Load center	mm	500							
1.7	轴距	Wheel base	mm	1179				1529			
	车轮	Wheels									
2.1	轮子类型(前/后)	Wheels type		PU							
2.2	驱动轮/平衡轮/承重轮 数量	Wheel quantity Driving wheel/Balance wheel /Bearing wheel		1/0/2							
2.3	驱动轮尺寸	Driving wheel size	mm	Φ248x75		Φ248x75		Φ248x75		Φ248x75	
2.4	平衡轮尺寸	Balance wheel size	mm								
2.5	承重轮尺寸	Bearing wheel size	mm	Φ160x76		Φ160x76		Φ160x76		Φ160x76	
	尺寸	Dimension									
3.1	标准门架起升高度	Standard lift height	mm	1400/2000/2500/3000/3300/3600		2500/3000/3300		1400/2000/2500/3000/3300/3600/4000		3700/3900/4200/4500	
3.2	门架作业时整车最大高度	Max extend height	mm	2500/3100/3600/4100/4400/4700		3150/3650/3900		2500/3100/3600/4100/4400/4700/5100		4350/4550/4650/5150	
3.3	门架缩回时整车静态高度	Mast lowered height	mm	1230/1580/1787/2030/2130/2300		1830/2080/2180		1230/1580/1787/2030/2130/2300/2545		1817/1917/2002/2102	
3.4	自由提升高度	free lifting height	mm	———		1270/1520/1620		———		1335/1448/1520/1620	
3.5	货叉最低高度	Lowered fork height	mm	55							
3.6	标准货叉规格(长/宽/厚)	Fork size(length/width/thickness)	mm	1070/100/40							
3.7	整车全长,踏板收起/放下	Overall length	mm	2502/3012				2942/3362			
3.8	车体宽度	Overall width	mm	1015							
3.9	货叉外侧间距	Outside width between forks	mm	200-660							
3.10	货叉内侧间距	Intside width between forks	mm	0-460							
3.11	最小转弯半径,踏板收起/放下	Min.Turning radius	mm	1352/1852				1808/2200			
3.12	最小直角堆垛通道宽度 (托盘800×1200,1200沿货叉放置)	Min.Aisle width for pallets 800×1200	mm	2685/3175				3140/3520			
3.13	最小直角堆垛通道宽度 (托盘1000×1200,1200沿货叉放置)	Min.Aisle width for pallets 1000×1200	mm	2715/3195				3160/3538			
3.14	最小离地间隙	Min.ground clearance	mm	80							
	性能	Performance									
4.1	最大行驶速度,满载/空载	Travel speed,laden/unladen	km/h	5/5							
4.2	最大起升速度,满载/空载	Lift speed,laden/unladen	mm/s	130/180							
4.3	最大下降速度,满载/空载	Lowering speed,laden/unladen	mm/s	100/200		100/150		100/230		100/230	
4.4	爬坡度,满载/空载	Gradeability,laden/unladen	%	5/7							
	电气配置	Electrical configuration									
5.1	驱动电机/起升电机/转向电机	Drive motor/ Lift motor/Steering motor	KW	AC1.5/DC3/DC0.15							
5.2	制动	Brake		电磁/再生 Electromagnetic/Regenerative							
	电池	Battery		铅酸电池 Lead-acidbattery	锂电池 Lithium battery (optional)	铅酸电池 Lead-acidbattery	锂电池 Lithium battery (optional)	铅酸电池 Lead-acidbattery	锂电池 Lithium battery (optional)	铅酸电池 Lead-acidbattery	锂电池 Lithium battery (optional)
6.1	电池电压/容量	Battery voltage/capacity	V/Ah	24/270	24/200	24/270	24/200	24/270	24/200	24/270	24/200
6.2	控制器	Controlller		ZAPI	ZAPI	ZAPI	ZAPI	ZAPI	ZAPI	ZAPI	ZAPI
6.3	电池重量	Battery	kg	247	105	247	105	247	105	247	105
6.4	自重(包含电池)	Service weight (with battery)	kg	1765	1623	1921	1679	1869	1693	1947	1947

COMPANY CONTACT INFO
Website: www.e-rentals.cn
Address: 2837 Khalil Abu Al-Safa, 6976 Ar Rimal, Riyadh 13264
2 Hours RENTALS INDUSTRIAL EQUIPMENT

CTD10-050

插腿式叉车 Legged Forklift Truck

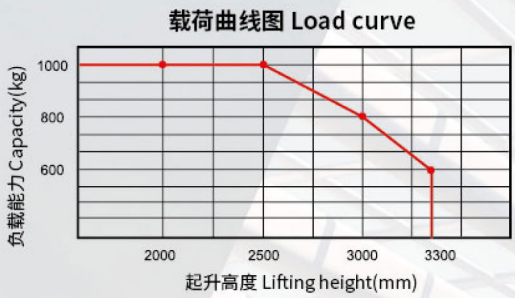



内置充电器

免维护电池

产品性能特点：

配置和性能

他励驱动电机，爬坡能力强；

高强度货叉；

标配内置充电器；

起升自动限位，长寿命限位开关；

安全

驱动无级调速，安全，静音；

控制器多重自动保护系统；

紧急反向装置/紧急制动开关。

Characteristics:

Configuration and performance

Separately excited motor,Strong climbling ability.

High strength forks.

Built-in charger is standard.

Automatic lifting limit,limit switch,long life.

Safety

Stepless speed control system,safe and quiet.

Controller with multiple automatic protection.

Emergency reversing device / Emergency brake

货叉外侧间距200-812mm

车型 Type	起升高度 Lift hight (mm)	门架类型 Mast type	叉腿外侧间距 (mm) Outside width between legs	叉腿内侧间距 (mm) Inside width between legs
CTD10-050	2000/2500/3000/3300	两级标准/2- STAGE STD	1120/1270/1420	970/1120/1270

CTD10-050

制造商和技术参数 Manufacturer's Data and Design Characteristics

	特性	Feature	单位	
1.1	型号	Model		CTD10
1.2	配置号	Configuration NO.		050
1.3	门架类型	Mast type		两级标准 2-stage
1.4	操作类型	Operating type		步行式 Walkie
1.5	额定载重	Load capacity	kg	1000
1.6	载荷中心距	Load center	mm	600
1.7	轴距	Wheel base	mm	1204
	车轮	Wheels		
2.1	轮子类型(前/后)	Wheels type		PU
2.2	驱动轮/平衡轮/承重轮 数量	Wheel quantity Driving wheel/Balance wheel /Bearing wheel		1/1/2
2.3	驱动轮尺寸	Driving wheel size	mm	Φ252x67
2.4	平衡轮尺寸	Balance wheel size	mm	Φ115x55
2.5	承重轮尺寸	Bearing wheel size	mm	Φ115x52
	尺寸	Dimension		
3.1	标准门架起升高度	Standard lift height	mm	2000/2500/3000/3300
3.2	门架作业时整车最大高度	Max extend height	mm	2593/3093/3593/3893
3.3	门架缩回时整车静态高度	Mast lowered height	mm	1620/1870/2120/2270
3.4	货叉最低高度	Lowered fork height	mm	55
3.5	标准货叉规格(长/宽/厚)	Fork size(length/width/thickness)	mm	1070/100/40
3.6	整车全长	Overall length	mm	1721
3.7	车体宽度	Overall width	mm	940
3.8	货叉外侧间距	Outside width between forks	mm	200-812
3.9	货叉内侧间距	Intside width between forks	mm	0-612
3.10	最小转弯半径	Min.Turning radius	mm	1411
3.11	最小直角堆垛通道宽度 (托盘800×1200,1200沿货叉放置)	Min.Aisle width for pallets 800×1200	mm	1970
3.12	最小直角堆垛通道宽度 (托盘1000×1200,1200沿货叉放置)	Min.Aisle width for pallets 1000×1200	mm	2010
3.13	最小离地间隙	Min.ground clearance	mm	50
	性能	Performance		
4.1	最大行驶速度,满载/空载	Travel speed,laden/unladen	km/h	3/3.5
4.2	最大起升速度,满载/空载	Lift speed,laden/unladen	mm/s	120/180
4.3	最大下降速度,满载/空载	Lowering speed,laden/unladen	mm/s	120/120
4.4	爬坡度,满载/空载	Gradeability,laden/unladen	%	5/7
	电气配置	Electrical configuration		
5.1	驱动电机/起升电机	Drive motor / Lift motor	KW	DC0.63/DC2.0
5.2	蓄电池电压	Battery voltage	V	24
5.3	蓄电池容量	Battery capacity	Ah	85
5.4	制动	brake		电磁/再生 Electromagnetic/Regenerative
5.5	控制器型号	Controller		HELI(可选CURTIS)
	重量	Weight		
6.1	蓄电池重量	Battery weight	Kg	48
6.2	自重(包含蓄电池)	Service weight with battery	kg	710

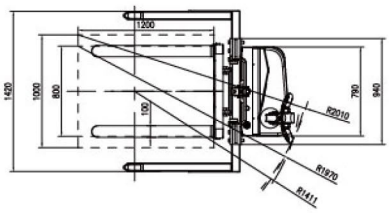

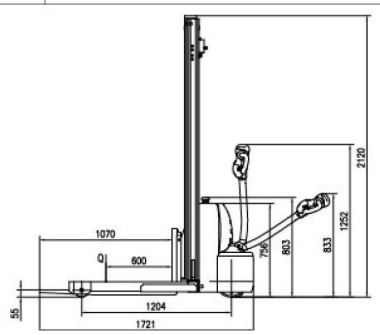

COMPANY CONTACT INFO
Website: www.e-rentals.cn
Address: 2837 Khalil Abu Al-Safa, 6976 Ar Rimal, Riyadh 13264

E-rentals

CTD10-090

插腿式叉车 Legged Forklift Truck

载荷曲线图 Load curve

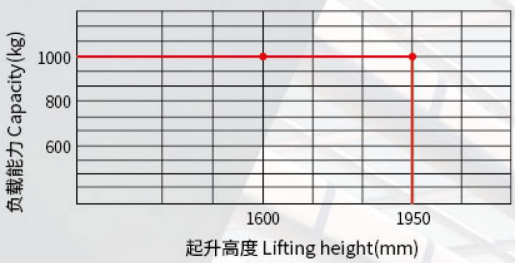

内置充电器

免维护电池



产品性能特点：

配置和性能

他励驱动电机，爬坡能力强；

高强度货叉；

标配内置充电器；

起升自动限位，长寿命限位开关；

安全

驱动无级调速，安全，静音；

控制器多重自动保护系统；

紧急反向装置/紧急制动开关。

Characteristics:

Configuration and performance

Separately excited motor,Strong climbling ability.

High strength forks.

Built-in charger is standard.

Automatic lifting limit,limit switch,long life.

Safety

Stepless speed control system,safe and quiet.

Controller with multiple automatic protection.

Emergency reversing device / Emergency brake switch.

货叉外侧间距200-812mm

车型 Type	起升高度 Lift hight (mm)	门架类型 Mast type	货叉外侧间距 (mm) Outside width between legs	货叉内侧间距 (mm) Inside width between legs
CTD10-090	1600/1950	单级 SINGLE STAGE	1120/1270/1420	970/1120/1270

CTD10-090

制造商和技术参数 Manufacturer's Data and Design Characteristics

	特性	Feature	单位	
1.1	型号	Model		CTD10
1.2	配置号	Configuration NO.		090
1.3	门架类型	Mast type		单级 single stage
1.4	操作类型	Operating type		步行式 Walkie
1.5	额定载重	Load capacity	kg	1000
1.6	载荷中心距	Load center	mm	600
1.7	轴距	Wheel base	mm	1134
	车轮	Wheels		
2.1	轮子类型(前/后)	Wheels type		PU
2.2	驱动轮/平衡轮/承重轮 数量	Wheel quantity Driving wheel/Balance wheel /Bearing wheel		1/1/2
2.3	驱动轮尺寸	Driving wheel size	mm	Φ252x67
2.4	平衡轮尺寸	Balance wheel size	mm	Φ115x55
2.5	承重轮尺寸	Bearing wheel size	mm	Φ115x52
	尺寸	Dimension		
3.1	标准门架起升高度	Standard lift height	mm	1600/1950
3.2	门架作业时整车最大高度	Max extend height	mm	2055/2405
3.3	门架缩回时整车静态高度 Mast lowered height	Mast lowered height	mm	2055/2405
3.4	货叉最低高度	Lowered fork height	mm	55
3.5	标准货叉规格(长/宽/厚)	Fork size(length/width/thickness)	mm	1070/100/40
3.6	整车全长	Overall length	mm	1640
3.7	车体宽度	Overall width	mm	940
3.8	货叉外侧间距	Outside width between forks	mm	200-812
3.9	货叉内侧间距	Intside width between forks	mm	0-612
3.10	最小转弯半径	Min.Turning radius	mm	1344
3.11	最小直角堆垛通道宽度 (托盘800×1200, 1200沿货叉放置)	Min.Aisle width for pallets 800×1200	mm	1894
3.12	最小直角堆垛通道宽度 (托盘1000×1200, 1200沿货叉放置)	Min.Aisle width for pallets 1000×1200	mm	1936
3.13	最小离地间隙	Min.ground clearance	mm	50
	性能	Performance		
4.1	最大行驶速度，满载/空载	Travel speed,laden/unladen	km/h	3/3.5
4.2	最大起升速度，满载/空载	Lift speed,laden/unladen	mm/s	120/180
4.3	最大下降速度，满载/空载	Lowering speed,laden/unladen	mm/s	120/120
4.4	爬坡度，满载/空载	Gradeability,laden/unladen	%	5/7
	电气配置	Electrical configuration		
5.1	驱动电机/起升电机	Drive motor / Lift motor	KW	DC0.63/DC2.0
5.2	蓄电池电压	Battery voltage	V	24
5.3	蓄电池容量	Battery capacity	Ah	85
5.4	制动	brake		电磁/再生 Electromagnetic/Regenerative
5.5	控制器型号	Controller		HELI(可选CURTIS)
	重量	Weight		
6.1	蓄电池重量	Battery weight	Kg	48
6.2	自重(包含蓄电池)	Service weight with battery	kg	514

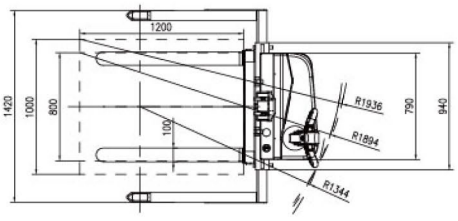

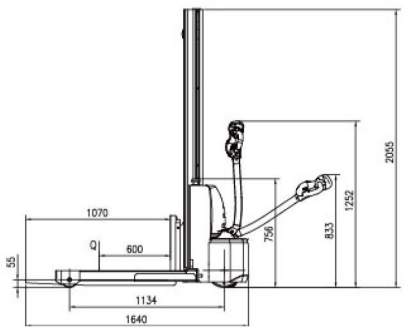

COMPANY CONTACT INFO
Website: www.e-rentals.cn
Address: 2837 Khalil Abu Al-Safa, 6976 Ar Rimal, Riyadh 13264

rentals

CTD14-920
CTD16-D920/960/360
插腿式叉车 Legged Forklift Truck

载荷曲线图 Load curve

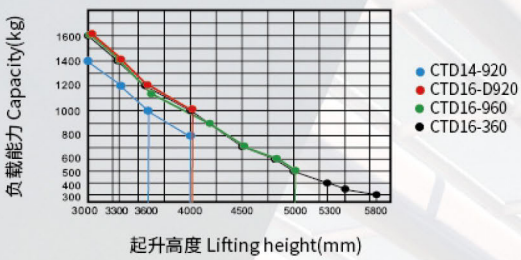



产品性能特点:

配置和性能
电子助力转向，轻便、静音；
双路电磁阀，三种下降速度模式；
驱动单元专利设计浮动机构；
交流驱动，无碳刷、免维护；
意大利ZAPI驱动控制器；
电磁、再生制动系统；
起升自动限位，长寿命接近开关。

安全
弯道自动减速装置，更安全；
货叉高货位，车辆行驶自动减速；
驱动无级调速，安全、静音；
控制器多重自动保护系统；
紧急反向装置/紧急制动开关；
高货位车辆行驶自动减速。
锂电款采用磷酸铁锂电池，充电快，效率高。

Characteristics:

Configuration and performance
Electronic power steering sysem,light and low noise.
Two-way magnetic valve,three drop speed mode.
Drive unit floating bodies with patent design.
AC Driving system,No carbon brush,maintenance free.
Italy ZAPI driving controller.
Electromagnetic,regenerative braking system.
Automatic lifting limit,proximity switch,long life.

Safety
Curve automatic deceleration devices,more safe.
Goods high position,vahicle automatic deceleration.
Stepless speed control system,safe and quiet.
Controller with multiple automatic protection.
Emergency reversing device/emergency brake switch.
Hight position automatic reduction device.
The LFP model lithium batteries are fast charging and efficient.

车型 Type	起升高度 Lift hight (mm)	门架类型 Mast type	叉腿外侧间距 (mm) Outside width between legs	叉腿内侧间距 (mm) Inside width between legs
CTD14-920	1400/2000/2500/3000/3300/3600/4000	两级标准/2- STAGE STD	1170/1320/1470/1650	970/1120/1270/1450
CTD16-D920	1400/2000/2500/3000/3300/3600/4000	两级标准/2- STAGE STD		
CTD16-960	3700/3900/4200/4500/4700/5000	三级全自由/FULL FREE 3- STAGE STD		
CTD16-360	5300/5500/5800	三级全自由/FULL FREE 3- STAGE STD		

CTD14-920 CTD16-D920/960/360

制造商和技术参数 Manufacturer' s Data and Design Characteristics

	特性	Feature	单位							
1.1	型号	Model		CTD14	CTD16	CTD16		CTD16		
1.2	配置号	Configuration NO.		920	D920	960		360		
1.3	门架类型	Mast type		两级标准 2-stage		三级全自由 Full free 3-stage				
1.4	操作类型	Operating type		步行式/乘驾式 Walkie/Stand On						
1.5	额定载重	Load capacity	kg	1400	1600					
1.6	载荷中心距	Load center	mm	600						
1.7	轴距	Wheel base	mm	1310		1375				
	车轮	Wheels								
2.1	轮子类型(前/后	Wheels type		PU						
2.2	驱动轮/平衡轮/承重轮 数量	Wheel quantity Driving wheel/Balance wheel /Bearing wheel		1/2/4						
2.3	驱动轮尺寸	Driving wheel size	mm	Φ248x75						
2.4	平衡轮尺寸	Balance wheel size	mm	Φ115x55						
2.5	承重轮尺寸	Bearing wheel size	mm	Φ84x70						
	尺寸	Dimension								
3.1	标准门架起升高度	Standard lift height	mm	1400/2000/2500/3000/3300/3600/4000		3700/3900/4200/4500/4700/5000		5300/5500/5800		
3.2	门架作业时整车最大高度	Max extend height	mm	1900/2500/3000/3500/3800/4100/4500		4200/4400/4700/5000/5200/5500		5800/6000/6300		
3.3	门架缩回时整车静态高度	Mast lowered height	mm	1185/1535/1765/1980/2135/2335/2500		1800/1900/1985/2085/2135/2235		2520/2590/2690		
3.4	自由提升高度	free lifting height	mm	———		1335/1448/1520/1620/1670/1770		2074/2134/2234		
3.5	货叉最低高度	Lowered fork height	mm	55						
3.6	标准货叉规格(长/宽/厚)	Fork size(length/width/thickness)	mm	1070/100/40						
3.7	整车全长，踏板收起/放下	Overall length	mm	2005/2425		2073/2493				
3.8	车体宽度	Overall width	mm	1470						
3.9	最小转弯半径，踏板收起/放下	Min.Turning radius	mm	1565/1975		1595/2010				
3.10	最小直角堆垛通道宽度 (托盘800×1200，1200沿货叉放置)	Min.Aisle width for pallets 800×1200	mm	2230/2560		2230/2625				
3.11	最小直角堆垛通道宽度 (托盘1000×1200，1200沿货叉放置)	Min.Aisle width for pallets 1000×1200	mm	2260/2585		2260/2650				
3.12	最小离地间隙	Min.ground clearance	mm	50						
	性能	Performance								
4.1	最大行驶速度，满载/空载	Travel speed,laden/unladen	km/h	6/6						
4.2	最大起升速度，满载/空载	Lift speed,laden/unladen	mm/s	130/180						
4.3	最大下降速度，满载/空载	Lowering speed,laden/unladen	mm/s	100/230	130/230	100/200				
4.4	爬坡度，满载/空载	Gradeability,laden/unladen	%	6/8						
	电气配置	Electrical configuration								
5.1	驱动电机/起升电机/转向电机	Drive motor/ Lift motor/Steering motor	KW	AC1.5/DC3/DC0.15						
5.2	制动	Brake		电磁/再生 Electromagnetic/Regenerative						
	电池	Battery		铅酸电池 Lead-acidbattery	锂电池 Lithium battery (optional)	铅酸电池 Lead-acidbattery	锂电池 Lithium battery (optional)	铅酸电池 Lead-acidbattery	锂电池 Lithium battery (optional)	铅酸电池 Lead-acidbattery	锂电池 Lithium battery (optional)
6.1	电池电压/容量	Battery voltage/capacity	V/Ah	24/280	24/200	24/280	24/200	24/280	24/200	24/280	24/200
6.2	控制器	Controlller		ZAPI	ZAPI	ZAPI	ZAPI	ZAPI	ZAPI	ZAPI	ZAPI
6.3	电池重量	Battery	kg	235	99	235	99	235	99	235	99
6.4	自重(包含电池)	Service weight (with battery)	kg	1276	1140	1336	1200	1577	1456	1657	1536

COMPANY CONTACT INFO
Website: www.e-rentals.cn
Address: 2837 Khalil Abu Al-Safa, 6976 Ar Rimal, Riyadh 13264
2Hours RENTALS INDUSTRIAL EQUIPMENT

E-rentals

CTD16-960H

插腿式叉车 Legged Forklift truck



产品性能特点:

电子助力转向，轻便、静音；
双路电磁阀，三种下降速度模式；
交流驱动，无碳刷、免维护；
起升自动限位，长寿命接近开关；
金属罩壳-高强度，耐撞击。
锂电款采用磷酸铁锂电池，充电快，效率高。

安全:

弯道自动减速装置，更安全；
货叉高货位，车辆行驶自动减速；
控制器多重自动保护系统；
紧急反向装置/紧急制动开关。

Advantages:

Configuration And Performance
Electronic power steering system，light and low noise；
Two-way magnetic valve，three drop speed mode；
AC Driving system，No carbon brush，maintenance free；
Automatic lifting limit，proximity switch，long life；
Metal shell--High strength，safer.
The LFP model lithium batteries are fast charging and efficient.

Safety :

Curve automatic deceleration devices，more safe；
Goods high position，vehicle automatic deceleration；
Controller with Multipe automatic protection；
Emergency reversing device/Emergency brake switch.

载荷曲线图 Load curve

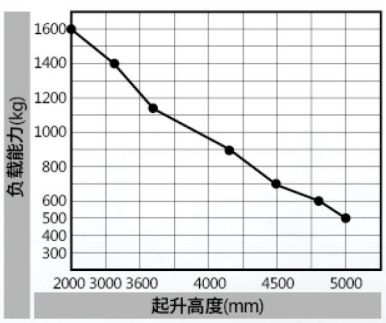

CTD16-960H

制造商和技术参数 Manufacturer' s Data and Design Characteristics					
	特性	Feature	单位Unit		
1.1	型号	Model		CTD16	
1.2	配置号	Configuration NO		960H	
1.3	类型	Type		窄腿Narrow legs	
1.4	门架类型	Mast type		三级全自由Full free 3-stage	
1.5	操作类型	Operating type		步行式Walkie	
1.6	额定载重	Load capacity	kg	1600	
1.7	载荷中心距	Load center	mm	600	
1.8	轴距	Wheel base	mm	1330	
	车轮	Wheels			
2.1	轮子类型(前/后)	Wheels type		PU	
2.2	驱动轮/平衡轮/承重轮数量	Wheel quantity Driving wheel/Balance wheel/Bearing wheel		1/0/4	
2.3	驱动轮尺寸	Driving wheel size	Φ	248X75	
2.4	承重轮尺寸	Balance wheel size	Φ	84X70	
	尺寸	Dimension	mm		
3.1	标准门架起升高度	Standard lift height	mm	3700/3900/4200/4500/4700/5000	
3.2	门架作业时整车最大高度	Max extend height	mm	4200/4400/4700/5000/5200/5500	
3.3	门架缩回时整车静态高度	Mast lowered height	mm	1800/1900/1985/2085/2135/2235	
3.4	货叉最低高度	Lowered fork height	mm	55	
3.5	标准货叉规格(长/宽/厚)	Fork size(length/width/thickness)	mm	1070/100/40	
3.6	整车全长	Overall length	mm	1910	
3.7	车体宽度	Overall widthMin	mm	1470	
3.8	最小转弯半径	Turning radius	mm	1500	
3.9	最小直角堆垛通道宽度,踏板收起/放下(托盘800×1200,1200沿货叉放置)	Min.Aisle width for pallets 800×1200	mm	1850	
3.10	最小直角堆垛通道宽度,踏板收起/放下(托盘1000×1200,1200沿货叉放置)	Min.Aisle width for pallets 1000×1200	mm	2070	
3.11	最小离地间隙	Min.ground clearance		50	
	性能	Performance	km/h		
4.1	最大行驶速度,满载/空载	Travel speed,laden/unladen	mm/s	3.5/4.0	
4.2	最大起升速度,满载/空载	Lift speed,laden/unladen	mm/s	130/180	
4.3	最大下降速度,满载/空载	Lowering speed,laden/unladen	%	100/180	
4.4	爬坡度,满载/空载	Gradeability,laden/unladen		5/7	
	电气配置	Electrical configuration	KW		
5.1	驱动电机/起升电机/转向电机	Drive motor / Lift motor /Steering motor	V	AC1.5/DC3.0/DC 0.15	
5.2	制动	Brake		电磁/再生 Electromagnetic/Regenerative	
5.3	控制器型号	Weight		ZAPI	
	重量	Controller	Kg		
6.1	电池	Battery	kg	铅酸电池Lead batteries	锂电池Lithium battery
6.2	电池电压/容量	Battery voltage / capacity	kg	24V/270Ah	24V/200Ah
6.3	蓄电池重量	Battery weight	kg	245	100
6.4	自重(包含蓄电池)	Service weight with battery	kg	1510	1365

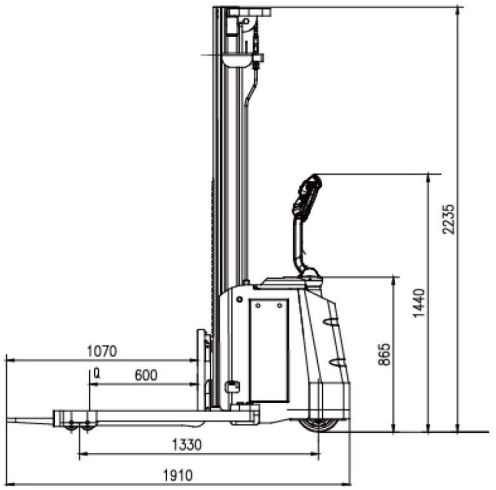

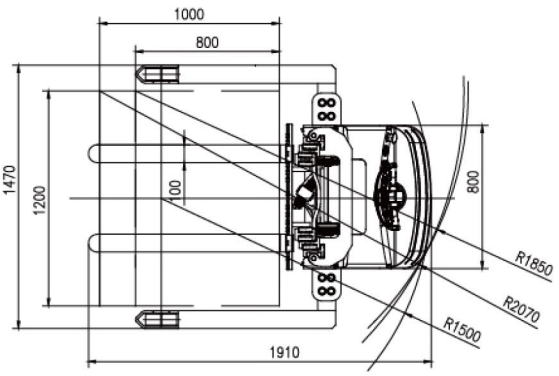

COMPANY CONTACT INFO
Website: www.e-rentals.cn
Address: 2837 Khalil Abu Al-Safa, 6976 Ar Rimal, Riyadh 13264

E-rentals

www.e-rentals.cn

CTD20-Y

WALKIE LITHIUM BATTERY PALLET TRUCK

步行式越野堆垛车



产品性能特点:

1.标配急停开关,紧急反向安全装置。
2.带液晶屏,钥匙开关。
3.驱动轮和承重轮标配越野轮,越野更耐用。
4.适用于多种环境下使用,复杂工况通过性更强。
5.金属罩壳,高强度,耐撞击。
6.可调节货叉,根据不同情况,调节货叉外宽。

CHARACTERISTICS:

1.Standard emergency stop switch, emergency reverse safety device.
2.With LCD screen, key switch.
3.The drive wheel and load-bearing wheel are equipped with off-road wheels, which are more durable for off-road driving.
4.Suitable for a variety of environments; stronger maneuverability in complex conditions.
5.Metal housing, high strength, impact resistant.
6.Adjustable forks, adjust the width of the forks according to different situations.

充电快速 FAST AND CHARGING | 稳定·可靠 STABLE AND RELIABLE | 简洁·灵巧 SIMPLE AND DEXTEROUS | 维修便捷 CONVENIENT MAINTENANCE

CTD20-Y

	特性	Feature		
1.01	型号	Model		CTD20-Y
1.02	操作类型	Operating type		步行式Walking style
1.03	额定载重	Load capacity	kg	2000
1.04	载荷中心距	Load center	mm	500
1.05	轴距	Wheel base	mm	1320
	车轮	Wheels		
2.01	轮子类型	Wheels type		橡胶 Rubber
2.02	驱动轮/承重轮数量	Wheel quantity		1/2
2.03	驱动轮尺寸	Driving wheel size	mm	φ300×110
2.04	承载轮尺寸 Bearing wheel size	Bearing wheel size	mm	φ260×100
	尺寸	Dimension		
3.01	标准门架起升高度	Standard lift height	mm	1600
3.02	门架作业时整车最大高度	Max extend height	mm	2358
3.03	门架缩回时整车静态高度	Mast lowered height	mm	2030
3.04	货叉最低离地高度	Min.fork lowered height	mm	40
3.05	货叉外侧间距	Outside width between forks	mm	204-654
3.06	货叉内侧间距	Inside width between forks	mm	124-574
3.07	标准货叉规格	Fork size (length/width)	mm	40×120×1070
3.08	整车全长	Overall length	mm	1760
3.09	车体宽度	Overall width	mm	1615
3.10	最小转弯半径	Min.Turning radius	mm	1480
3.11	最小直角堆垛通道宽度(托盘800×1200,1200沿货叉放置)	Min.Aisle width for pallets 800×1200	mm	2040
3.12	最小直角堆垛通道宽度(托盘1000×1200,1200沿货叉放置)	Min.Aisle width for pallets 1000×1200	mm	1840
	性能	Performance		
4.01	最大行驶速度,满载/空载	Travel speed,laden/unladen	km/h	3.6/3.6
4.02	最大起升速度,满载/空载	Lift speed,laden/unladen	mm/s	100/100
4.03	最大下降速度,满载/空载	Lowering speed,laden/unladen	mm/s	120/120
4.04	爬坡度,满载/空载	Gradeability,laden/unladen	%	6/8
	电气配置	Electrical configuration		
5.01	驱动电机/起升电机	Drive motor/ Lift motor	KW	1.5/3.0
50.2	控制器型号	Controller		大能 Great power
5.03	制动	Brake		电磁制动 Electromagnetic
	电池	Battery		
6.01	蓄电池电压/容量	Battery voltage / capacity	V/Ah	48/65
6.02	蓄电池电压/容量	Charger specification	V/A	48/10
6.03	蓄电池重量	Battery weight	kg	75
6.04	自重(包含蓄电池)	Service weight with battery	kg	950
	其他	Others		
7.01	转向类型	Steering type		机械转向Mechanical steering

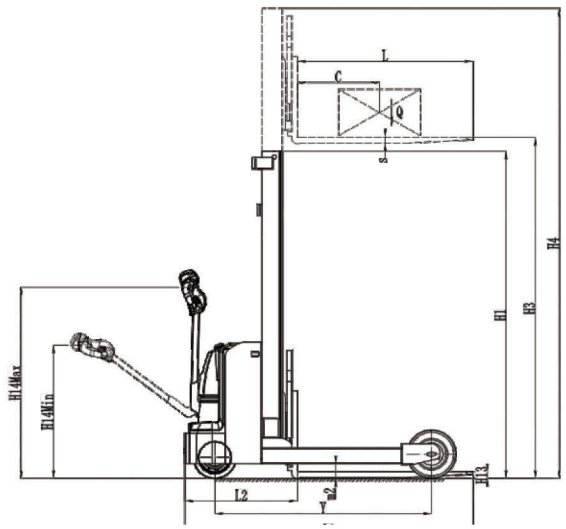

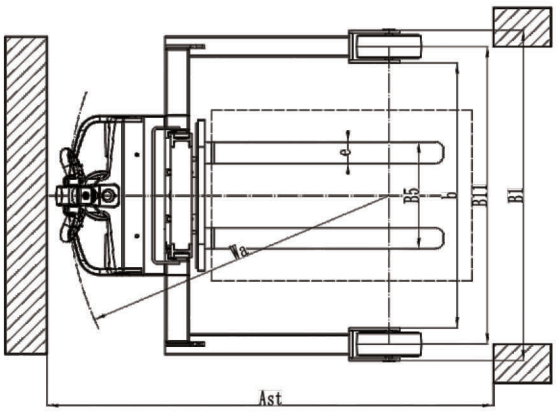

COMPANY CONTACT INFO
Website: www.e-rentals.cn
Address: 2837 Khalil Abu Al-Safa, 6976 Ar Rimal, Riyadh 13264

CQDM12/15-810

电动前移叉车
Electric Reach Truck

载荷曲线图 Load curve

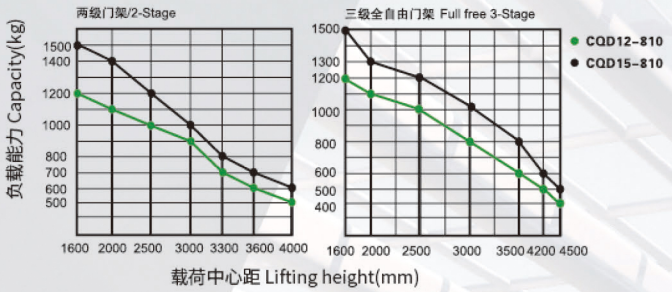

产品性能特点：

配置和性能

货叉倾斜，双油缸更平稳；
电液集成控制，多功能手柄；
电子助力转向，轻便，静音；
双路下降电磁阀，三种下降速度模式；
交流驱动电机，无碳刷，免维护；
起升自动限位，长寿命接近开关；

安全

转弯自动减速功能，更安全；
货叉高货位，车辆行驶自动降速；
驱动无级调速，安全，静音；
控制器多重自动保护系统；
紧急反向装置/紧急制动开关。
锂电款采用磷酸铁锂电池，充电快，效率高。

Characteristics:

Configuration and performance

Fork tilt,double oil cylinder more smoothly.
Electro-hydraulic integrated control,multi-function handle.
Electronic power steering system,light and low noise.
Two-way magnetic valve,three drop speed mode.
AC driving motor,without carbon brush and free maintenance.
Automatic lifting limit,proximity switch,long life.

Safety

Curve automatic deceleration,more safe.
Goods high position,vehicle automatic reduction.
Stepless speed control system,safe and quiet.
Controller with multiple automatic protection.
Emergency reversing device / Emergency brake switch.
The LFP model lithium batteries are fast charging and efficient.



货叉外侧间距200-755mm

车型 Type	起升高度 Lift hight (mm)	门架类型 Mast type	叉腿外侧间距 (mm) Outside width between legs	叉腿内侧间距 (mm) Inside width between legs
CQDM12/15-810	1400/2000/2500/3000/3300/3600/4000	两级标准/2-STAGE STD	200-755	0-555
CQDM12/15-810	2500/3700/3900/4200/4500/5000	三级全自由/FULL FREE 3-STAGE		

CQDM12/15-810

制造商和技术参数 Manufacturer's Data and Design Characteristics							
	特性	Feature	单位				
1.1	型号	Model		CQDM12/15		CQDM12/15	
1.2	配置号	Configuration No.		810			
1.3	门架类型	Mast type		两级2-Stage STD		三级全自由Full free 3-Stage	
1.4	操作类型	Operating type		乘驾式 Stand on			
1.5	额定载重	Load capacity	kg	1200/1500			
1.6	载荷中心距	Load center	mm	500			
1.7	轴距	Wheel base	mm	1332			
	车轮	Wheels					
2.1	轮子类型(前/后)	Wheels type		PU			
2.2	驱动轮/平衡轮/承重轮 数量	Wheel quantity Driving wheel/Balance wheel /Bearing wheel		1/0/2			
2.3	驱动轮尺寸	Driving wheel size		φ248×75			
2.4	承重轮尺寸	Bearing wheel size		φ235×85			
	尺寸	Dimension					
3.1	门架前移距离	Reach distance	mm	0-425			
3.2	标准门架起升高度	Standard lift height	mm	1400/2000/2500/3000/3300/3600/4000		2500/3700/3900/4200/4500/5000	
3.3	门架作业时整车最大高度	Max extend height	mm	2280/2880/3380/3880/4180/4480/4880		3405/4605/4805/5105/5405/5905	
3.4	门架缩回时整车静态高度	Mast lowered height	mm	1490/1790/2040/2290/2440/2590/2790		1432/1870/1940/2040/2140/2357	
3.5	自由提升高度	free lifting height	mm	—		714/1114/1180/1280/1380/1547	
3.6	货叉最低高度	Lowered fork height	mm	55			
3.7	标准货叉规格(长/宽/厚)	Fork size(length/width/thickness)	mm	1070/100/40			
3.8	整车全长，踏板收起/放下	Overall length	mm	2440/2896			
3.9	车体宽度	Overall width	mm	1083			
3.10	货叉外侧间距	Outside width between forks	mm	200-755			
3.11	货叉倾斜角度(前/后)	Tilt of fork (F/B)	Grad	3/5			
3.12	最小转弯半径，踏板收起/放下	Min.Turning radius	mm	1596/2040			
3.13	最小直角堆垛通道宽度 (托盘800×1200，1200沿货叉放置)	Min.Aisle width for pallets 800×1200	mm	2620/3050			
3.14	最小直角堆垛通道宽度 (托盘1000×1200，1200沿货叉放置)	Min.Aisle width for pallets 1000×1200	mm	2645/3075			
3.15	最小离地间隙	Min.ground clearance	mm	60			
	性能	Performance					
4.1	最大行驶速度，满载/空载	Travel speed,laden/unladen	km/h	5/5.5			
4.2	最大起升速度，满载/空载	Lift speed,laden/unladen	mm/s	130/180			
4.3	最大下降速度，满载/空载	Lowering speed,laden/unladen	mm/s	100/180			
4.4	爬坡度，满载/空载	Gradeability,laden/unladen	%	3/5			
	电气配置	Electrical configuration					
5.1	驱动电机/起升电机	Drive motor/ Lift motor	KW	AC1.5/DC3.0/DC0.15			
5.2	制动	Brake		ZAPI			
	电池	Battery		铅酸电池 Lead-acid battery	锂电池 Lithium battery (optional)	铅酸电池 Lead-acid battery	锂电池 Lithium battery (optional)
6.1	电池电压/容量	Battery voltage/capacity	V/Ah	24/280	24/200	24/280	24/200
6.2	控制器	Controlller		ZAPI	ZAPI	ZAPI	ZAPI
6.3	电池重量	Battery	kg	235	105	235	105
6.4	自重(包含电池)	Service weight (with battery)	kg	2185	2069	2205	2220

COMPANY CONTACT INFO
Website: www.e-rentals.cn
Address: 2837 Khalil Abu Al-Safa, 6976 Ar Rimal, Riyadh 13264
2 Hours RENTALS INDUSTRIAL EQUIPMENT

E rentals

CQDM16/20-810

产品性能特点：

货叉倾斜，双油缸更平稳；
电液集成控制，多功能手柄；
电子助力转向，轻便，静音；
双路下降电磁阀，三种下降速度模式；
交流驱动电机，无碳刷，免维护；
起升自动限位，长寿命接近开关；
转弯自动减速功能，更安全；
货叉高货位，车辆行驶自动降速；
驱动无级调速，安全，静音；
控制器多重自动保护系统；
紧急反向装置和紧急制动开关；
锂电款采用磷酸铁锂电池，充电快，效率高。

Characteristics:

1. Fork tilt with double cylinders for stable operation
2. Integrated hydraulic control, multi-function joy-stick
3. Electric power steering, light and quiet
4. Dual-circuit lowering electromagnetic valve, three lowering speed modes
5. AC drive motor, brushless & maintenance-free
6. Auto lifting limit, long-life proximity switch
7. Auto corner deceleration for higher safety
8. Auto speed reduction when forks are raised high
9. Stepless drive speed regulation, safe and quiet
10. Controller with multiple auto protection systems
11. Emergency reverse device & emergency stop switch
12. Lithium version: lithium iron phosphate battery, fast charging & high efficiency



CQDM16/20-810

	特性 Feature	单位		
1.1	型号 Model		CQDM16-810	CQDM20-810
1.2	门架类型 Mast type		两级2-Stage STD	
1.3	操作类型 Operating type		乘架式 Stand on	
1.4	额定载重 Load capacity	kg	1600	2000
1.5	载荷中心距 Load center	mm	500	
1.6	轴距 Wheel base	mm	1510	
	车轮 Wheels			
2.1	轮子类型(前/后) Wheels type		PU	
2.2	驱动轮/平衡轮/承重轮数量 Wheel quantity /Driving wheel/Bearing		1/0/2	
2.3	驱动轮尺寸Driving wheel size	mm	Φ248X75	
2.4	承重轮尺寸Bearing wheel size	mm	Φ235X85	
	尺寸 Dimension			
3.1	门架前移距离 Reach distance	mm	0-500	
3.2	标准门架起升高度 Standard lift height	mm	1400/2000/2500/3000/3300/3600/4000	
3.3	门架作业时整车最大高度 Max extendheight	mm	2280/2880/3380/3880/4180/4480/4880	
3.4	门架缩回时整车静态高度 Mast lowered height	mm	1490/1790/2040/2290/2440/2590/2790	
3.5	自由提升高度 free lifting height	mm	/	
3.6	货叉最低高度 Lowered fork height	mm	55	
3.7	标准货叉规格（长/宽/厚） Fork size(length/width/thickness)	mm	1070/100/40	
3.8	整车全长，踏板收起/放下 Overall length	mm	2440/2896	
3.9	车体宽度 Overall width	mm	1083	
3.10	货叉外侧间距 Outside width between forks	mm	200-755	
3.11	货叉倾斜角度(前/后) Tilt of fork(F/B)	Grad	3/5	
3.12	最小转弯半径，踏板收起/放下 Min.Tuming radius	mm	1732/2234	
3.13	最小直角堆垛通道宽度（托盘800×1200，1200沿货叉放置） Min.Aisle width	mm	2810/3312	
3.14	最小直角堆垛通道宽度（托盘1000×1200，1200沿货叉放置） Min.Aisle	mm	2860/3362	
3.15	最小离地间隙 Min.ground clearance	mm	60	
	性能 Performance			
4.1	最大行驶速度，满载/空载 Travel speed,laden/unladen	km/h	5/5.5	
4.2	最大起升速度，满载/空载 Lift speed,laden/unladen	mm/s	130/180	
4.3	最大下降速度，满载/空载 Lowering speed,laden/unladen	mm/s	100/180	
4.4	爬坡度，满载/空载 Gradeability,laden/unladen	%	3/5	
	电气配置 Electrical configuration			
5.1	驱动电机/起升电机/转向电机 Drive motor/ Lift motor /Steering motor	KW	AC1.5/DC3.0/DC0.15	
5.2	控制器 Controlller		前拓	
	电池 Battery		锂电池Lithium batery(optional)	
6.1	蓄电池电压/容量 Battery voltage / capacity	V/Ah	24/200	
6.2	充电器规格 Charger specification	V/A	24/100	
6.3	电池重量 Battery	kg	105	
6.4	自重（包含蓄电池）Service weight with battery	kg	2370	
	其他			
7.1	噪音水平 Noise level	dB(A)	≤75	
7.2	驱动类型 Drive control type		直流控制DC	

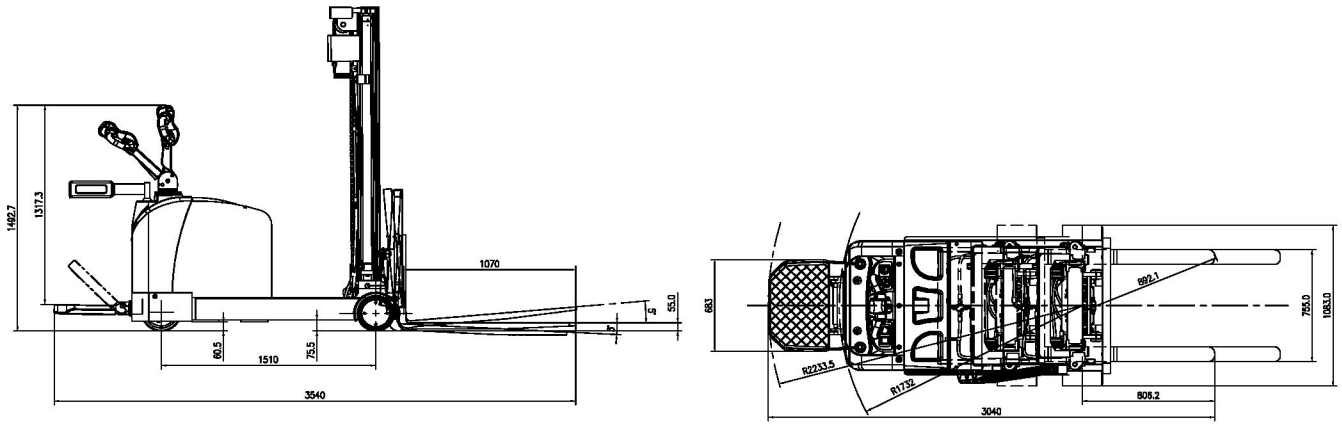

COMPANY CONTACT INFO
Website: www.e-rentals.cn
Address: 2837 Khalil Abu Al-Safa, 6976 Ar Rimal, Riyadh 13264

CQDH13/14-850

电动前移叉车
Electric Reach Truck

载荷曲线图 Load curve

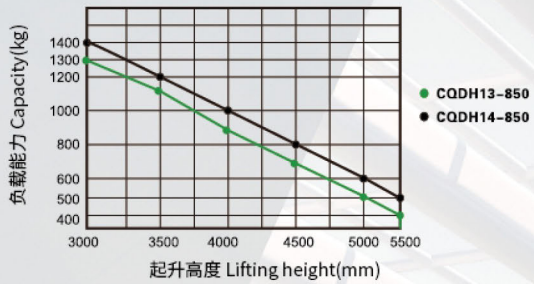

产品性能特点：

配置和性能

货叉倾斜，双油缸更平稳；
电子助力转向，轻便，静音；
双路下降电磁阀，三种下降速度模式；
交流驱动电机，无碳刷，免维护；
起升、前移、倾斜自动电限位，延长电机电池寿命；
标配Moon walk功能，手柄在任意角度车辆可以直线行驶。

安全

转弯自动减速功能，更安全；
货叉高货位，车辆行驶自动降速；
驱动无级调速，安全，静音；
控制器多重自动保护系统；
紧急反向装置/紧急制动开关。
锂电款采用磷酸铁锂电池，充电快，效率高。

Characteristics:

Configuration and performance

Fork tilt,double oil cylinder more smoothly.
Electronic power steering system,light and low noise.
Two-way magnetic valve,three drop speed mode.
AC driving motor,without carbon brush and free maintenance.
Lifting,reach, tilt automatic limit,delay motor and battery life.
Moon walk function is STD,handle at any angle,the vehicle goes straight.

Safety

Curve automatic deceleration,more safe.
Goods high position,vehicle automatic reduction.
Stepless speed control system,safe and quiet.
Controller with multiple automatic protection.
Emergency reversing device / Emergency brake switch.
The LFP model lithium batteries are fast charging and efficien.



货叉外侧间距200-812mm

车型 Type	起升高度 Lift hight (mm)	叉腿外侧间距 (mm) Outside width between legs	叉腿内侧间距 (mm) Inside width between legs
CQDH13/14-850	3500/3800/4000/4500/5000/5500	1190/1270/1420/1470	990/1070/1220/1270

CQDH13/14-850

制造商和技术参数 Manufacturer's Data and Design Characteristics

	特性	Feature	单位		
1.1	型号	Model		CQDH13/14	
1.2	配置号	Configuration No.		850	
1.3	门架类型	Mast type		三级全自由 Full free 3-Stage	
1.4	操作类型	Operating type		步行式 walkie	
1.5	额定载重	Load capacity	kg	1300/1400	
1.6	载荷中心距	Load center	mm	500	
1.7	轴距	Wheel base	mm	1478	
	车轮	Wheels			
2.1	轮子类型(前/后)	Wheels type		PU	
2.2	驱动轮/平衡轮/承重轮 数量	Wheel quantity Driving wheel/Balance wheel /Bearing wheel		1/0/4	
2.3	驱动轮尺寸	Driving wheel size		ф248×75	
2.4	承重轮尺寸	Bearing wheel size		ф126×75	
	尺寸	Dimension			
3.1	门架前移距离	Reach distance	mm	0-550	
3.2	标准门架起升高度	Standard lift height	mm	3500/3800/4000/4500/5000/5500	
3.3	门架作业时整车最大高度	Max extend height	mm	4710/5010/5210/5710/6210/6720	
3.4	门架缩回时整车静态高度	Mast lowered height	mm	1914/2014/2081/2248/2415/2582	
3.5	自由提升高度	free lifting height	mm	1141/1241/1408/1575/1742/1909	
3.6	货叉最低高度	Lowered fork height	mm	55	
3.7	标准货叉规格(长/宽/厚)	Fork size(length/width/thickness)	mm	1070/100/40	
3.8	整车全长	Overall length	mm	2225	
3.9	车体宽度	Overall width	mm	1430	
3.10	货叉外侧间距	Outside width between forks	mm	200-812	
3.11	货叉侧移距离	Distance shift fork side	mm	150	
3.12	货叉倾斜角度(前/后)	Tilt of fork (F/B)	Grad	4/3	
3.13	最小转弯半径,踏板收起/放下	Min.Turning radius	mm	1566	
3.14	最小直角堆垛通道宽度 (托盘800×1200,1200沿货叉放置)	Min.Aisle width for pallets 800×1200	mm	2135	
3.15	最小直角堆垛通道宽度 (托盘1000×1200,1200沿货叉放置)	Min.Aisle width for pallets 1000×1200	mm	2315	
3.16	最小离地间隙	Min.ground clearance	mm	30	
	性能	Performance			
4.1	最大行驶速度,满载/空载	Travel speed,laden/unladen	km/h	3.5/4	
4.2	最大起升速度,满载/空载	Lift speed,laden/unladen	mm/s	130/150	
4.3	最大下降速度,满载/空载	Lowering speed,laden/unladen	mm/s	100/180	
4.4	爬坡度,满载/空载	Gradeability,laden/unladen	%	3/5	
	电气配置	Electrical configuration			
5.1	驱动电机/起升电机	Drive motor/ Lift motor	KW	AC1.5/DC4.5/DC0.15	
5.2	制动	Brake		ZAPI	
	电池	Battery		铅酸电池Lead-acid battery	锂电池Lithium battery (optional)
6.1	电池电压/容量	Battery voltage/capacity	V/Ah	24/345(可选options:FAAM345)	24/200
6.2	控制器	Controlller		ZAPI	ZAPI
6.3	电池重量	Battery	kg	298	95
6.4	自重(包含电池)	Service weight (with battery)	kg	2296	2093

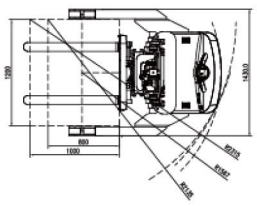

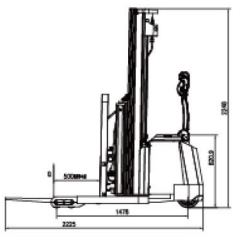

COMPANY CONTACT INFO

Website: www.e-rentals.cn

Address: 2837 Khalil Abu Al-Safa, 6976 Ar Rimal, Riyadh 13264

CQDH16-UD

电动前移叉车
Electric Reach Truck



产品性能特点：

配置和性能：

- 货叉倾斜，双油缸更平稳。
- 电子助力转向，轻便，静音。
- 双路下降电磁阀。
- 交流驱动电机，无碳刷，免维护。
- 起升、前移、倾斜自动电限位，延长电机电池寿命。

安全：

- 转弯自动减速功能，更安全。
- 货叉高货位，车辆行驶自动降速。
- 驱动无级调速，安全、静音。
- 控制器多重自动保护系统。
- 紧急反向装置/紧急制动开关。

Characteristics:

Configurations and performance:

- Fork tilt,double oil cylinder more smoothly.
- Electronic power steering system,light and low noise.
- Two-way magnetic valve,three drop speed mode.
- AC driving motor,without carbon brush and free maintenance.
- Lifting,reach,tilt automatic limit,delay motor and battery life.

Safety:

- Curve automatic deceleration,more safe.
- Goods high position,vehicle automatic reduction.
- Stepless speed control system,safe and quiet.
- Controller with multiple automatic protection.
- Emergency reversing device/Emergency brake switch.

载荷曲线图 Load curve

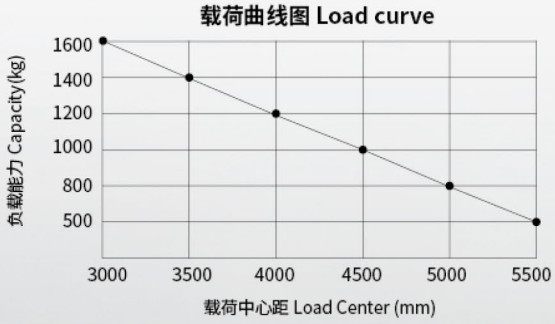

CQDH16-UD

制造商和技术参数 Manufacturer' s Data and Design Characteristics

	特性	Features		
1.1	型号	Model		CQDH16-UD
1.2	操作类型	Operating type		步行式
1.3	额定载重	Load capacity	kg	1600
1.4	载荷中心距	Load center	mm	500
1.5	轴距	Wheel base	mm	1478
1.6	前移距离	Reach distance	mm	0-600
	车轮	Wheels		
2.1	轮子类型	Wheels type		聚氨酯PU
2.2	驱动轮尺寸	Driving wheel size	mm	ø248X75
2.3	承载轮尺寸	Bearing wheel size	mm	ø126X75
2.4	车轮数量	Wheel quantity		1x+4
2.5	前轮距	Track width	mm	1325
2.6	支腿宽度规格	Distance between support arms	mm	1225
	尺寸	Dimensions		
3.1	货叉最低离地高度	Min.fork lowered height	mm	55
3.2	标准门架起升高度	Standard mast lift height	mm	3600/4500/6000
3.3	门架作业时最大高度	Height, mast extended	mm	4785/5685/7148
3.4	门架缩回时整车最大高度	Height, mast lowered	mm	1948/2248/2748
3.5	整车长度	Overall length	mm	2225
3.6	整车宽度	Overall width	mm	1435
3.7	货叉尺寸	Fork dimension:length x width x thickness	mm	1070x100x40
3.8	货叉外侧间距	Outside width between forks	mm	200-755
3.9	货叉倾角(前/后)	Fork tilt angle(F/R)	°	4/3
3.10	最小离地间隙	Ground clearance	mm	48.5
3.11	最小直角堆垛通道宽度(托盘1000x1200 1200沿货叉)	Min.Aisle width for pallets 1000×1200	mm	2690
3.12	最小直角堆垛通道宽度(托盘800x1200 1200沿货叉)	Min.Aisle width for pallets 800×1200	mm	2640
3.13	最小转弯半径	Min.Turning radius	mm	1566
	性能	Performance		
4.1	行驶速度 满载/空载	Travelling speed,laden/unladen	km/h	3.5/4
4.2	起升速度 满载/空载	Lifting speed,laden/unladen	mm/s	130/230
4.3	下降速度 满载/空载	Lowering speed,laden/unladen	mm/s	130/230
4.4	最大爬坡度 满载/空载	Gradeability,laden/unladen	mm/s	5/12
4.5	制动方式	Service brake type	%	电磁/再生制动 Electromagnetic /Regenerative
	电机和蓄电池	Motor and battery		
5.1	驱动电机功率	Traction motor rating	kw	AC 3
5.2	起升电机功率	Lift motor rating	kw	DC 3.0
5.3	蓄电池组 电压	Battery voltage	v	24
5.4	蓄电池组 容量	Battery capacity	Ah	345
5.5	控制器	Controller		前拓 QEXPEND
	重量	Weight		
6.1	自重(含电池)	Service weight(with battery)	kg	2290
6.2	电池重量	Battery weight	kg	300

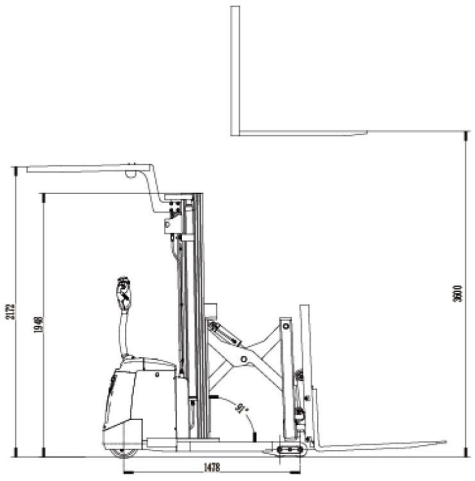

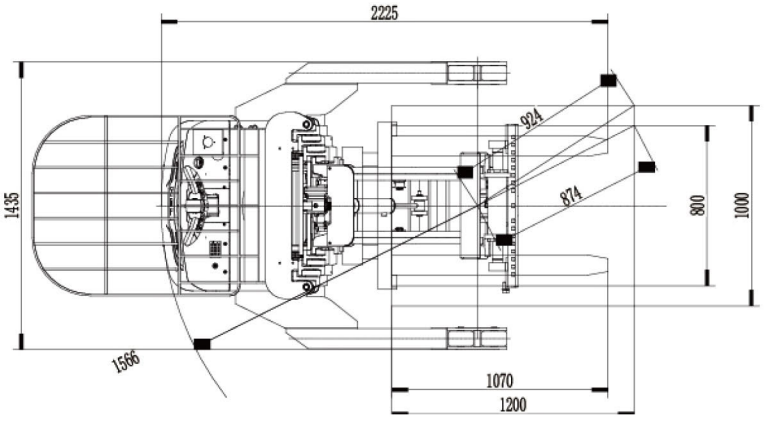

COMPANY CONTACT INFO
Website: www.e-rentals.cn
Address: 2837 Khalil Abu Al-Safa, 6976 Ar Rimal, Riyadh 13264

E-rentals

www.e-rentals.cn

CQD16-US

WALKIE LITHIUM BATTERY PALLET TRUCK

经济型座驾式前移式叉车

LI-ION LEAD ACID



产品性能特点:

1.子助力转向，轻便、静音
2.交流驱动电机，无碳刷，免维护
3.转弯自动减速功能，更安全
4.起升自动限位，长寿命接近开关安全
紧急制动开关
5.控制器多重自动保护系统

CHARACTERISTICS:

1.Electronic Power Steering, Effortless and Quiet.
2.AC drive motor, brushless, maintenance-free.
3.Automatic Speed Reduction in Turns for Enhanced Safety.
4.Lifting Auto-Limit with Long-Life Limit Switch for Safety.
5.Emergency Stop Switch Controller with Multiple Automatic Protection Systems

充电快速 FAST AND CHARGING | 稳定·可靠 STABLE AND RELIABLE | 简洁·灵巧 SIMPLE AND DEXTEROUS | 维修便捷 CONVENIENT MAINTENANCE

CQD16-US

	特性	Feature			
1.01	型号	Model		CQD16-US	
1.02	操作类型	Operating type		侧坐前移式 side-sitting forward-moving style	
1.03	额定载重	Load capacity	kg	1600	
1.04	载荷中心距	Load center	mm	600	
1.05	轴距	Wheel base	mm	1405	
	车轮	Wheels			
2.01	轮子类型	Wheels type		聚氨酯 PU	
2.02	驱动轮/承重轮数量	Wheel quantity		1/2	
2.03	驱动轮尺寸	Driving wheel size	mm	Φ248x75	
2.04	承载轮尺寸 Bearing wheel size	Bearing wheel size	mm	Φ235x85	
	尺寸	Dimension			
3.01	标准门架起升高度	Standard lift height	mm	6000	
3.02	门架作业时整车最大高度	Max extend height	mm	7030	
3.03	门架缩回时整车静态高度	Mast lowered height	mm	2663	
3.04	货叉最低离地高度	Min.fork lowered height	mm	55	
3.05	货叉外侧间距	Outside width between forks	mm	252-708	
3.06	货叉内侧间距	Inside width between forks	mm	52-508	
3.07	标准货叉规格	Fork size (length/width)	mm	100x40x1070	
3.08	整车全长	Overall length	mm	2325-2825	
3.09	车体宽度	Overall width	mm	1110	
3.10	最小转弯半径	Min.Turning radius	mm	1654	
3.11	最小直角堆垛通道宽度(托盘800×1200,1200沿货叉放置)	Min.Aisle width for pallets 800×1200	mm	2664	
3.12	最小直角堆垛通道宽度(托盘1000×1200,1200沿货叉放置)	Min.Aisle width for pallets 1000×1200	mm	2695	
	性能	Performance			
4.01	最大行驶速度,满载/空载	Travel speed,laden/unladen	km/h	8/10	
4.02	最大起升速度,满载/空载	Lift speed,laden/unladen	mm/s	200/220	
4.03	最大下降速度,满载/空载	Lowering speed,laden/unladen	mm/s	140/180	
4.04	爬坡度,满载/空载	Gradeability,laden/unladen	%	5/5	
	电气配置	Electrical configuration			
5.01	驱动电机/起升电机	Drive motor/ Lift motor	KW	2.5/4.5	
50.2	控制器型号	Controller		前拓 Front exploration	
5.03	制动	Brake		电磁制动 Electromagnetic	
	电池	Battery		铅酸电池 Lead-acid battery	锂电电池 Lithium battery
6.01	蓄电池电压/容量	Battery voltage / capacity	V/Ah	48/195	48/150
6.02	蓄电池电压/容量	Charger specification	V/A	48/30	48/50
6.03	蓄电池重量	Battery weight	kg	397	346
6.04	自重(包含蓄电池)	Service weight with battery	kg	2723	2672
	其他	Others			
7.01	转向类型	Steering type		电子转向 Electronic	

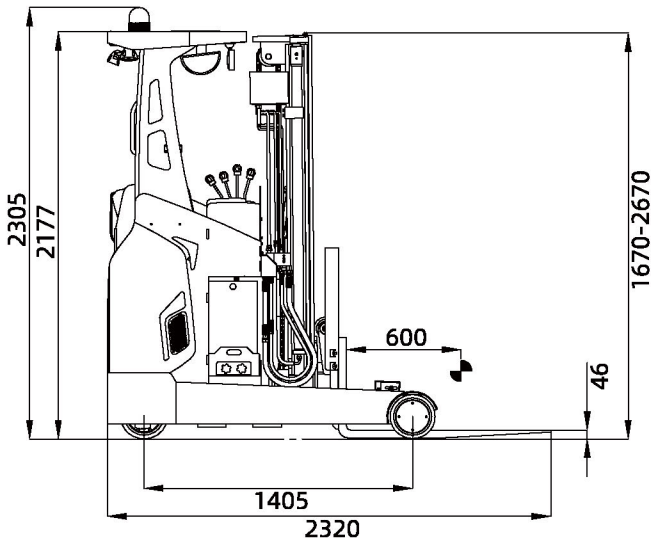

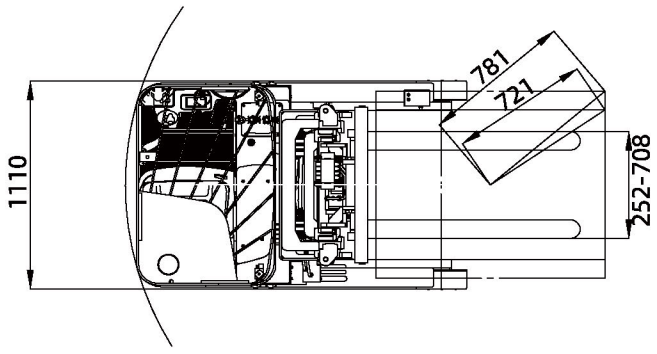

COMPANY CONTACT INFO
Website: www.e-rentals.cn
Address: 2837 Khalil Abu Al-Safa, 6976 Ar Rimal, Riyadh 13264

E-rentals

www.e-rentals.cn

QYD30/35 /40/45-480

产品性能特点：

电子助力转向，轻便、静音；
交流驱动，无碳刷、免维护；
美国CURTIS驱动控制器；
电磁、再生制动系统。
弯道自动减速装置，更安全；
驱动无级调速，安全、静音；
控制器多重自动保护系统。

Characteristics:

1. Electric power steering, light and quiet operation;
2. AC drive system, brushless and maintenance-free;
3. Equipped with CURTIS drive controller imported from USA;
4. Electromagnetic & regenerative braking system;
5. Automatic corner deceleration device for higher safety;
6. Stepless drive speed regulation, safe and low-noise;
7. Multi automatic protection system built in controller.



充电快速 FAST AND CHARGING | 稳定·可靠 STABLE AND RELIABLE | 简洁·灵巧 SIMPLE AND DEXTEROUS | 维修便捷 CONVENIENT MAINTENANCE

QYD30/35/40/45-480

全电动牵引车技术参数 Electric Tractor Technical Specification

	特性 Feature	单位	
1	型号 Model		QYD30/35/40/45
2	配置号 Configuration No.		480
3	额定牵引重量 Rated traction weight	kg	3000-4500
4	额定牵引力 Rated pulling power	N	1100
5	轴距 Wheel base	mm	1055
6	后轮距 Rear tread	mm	540
7	操作类型 Operating type		乘驾式 Stand On
	车轮 Wheels		
8	轮子类型 Wheels type		PU
9	轮子数量 Wheel quantity		驱动轮1/承重轮2 Driving wheel 1/Bearingwheel 2
10	驱动轮尺寸 （前轮）Driving wheel size	mm	¢ 248*75
11	承重轮尺寸（后轮）Bearing wheel size	mm	¢ 160*73
	尺寸 Dimension		
12	整车全长 Overall length	mm	1369
13	车体宽度 Overall width	mm	790
14	整车高度（含手柄）Overall height(With handle)	mm	1402
15	整车高度（不含手柄）Overall height(Without handle)	mm	966
16	最小转弯半径 Min. Turning radius	mm	1255
17	最低离地间隙 Min. Groundclearance	mm	34. 5
18	牵引挂钩高度 Coupler height	mm	287. 5
	性能 Performance		
19	最大行驶速度，满载/空载 Travel speed, laden/unladen	km/h	5. 5/6
20	爬坡度，满载/空载 Gradeability, laden/unladen	%	5/7
	电气配置 Electrical configuration		
21	驱动电机 Drive motor	KW	AC 1. 5
22	转向电机 Steering motor	KW	DC 0. 15
23	蓄电池电压 Battery voltage	V	24
24	蓄电池容量 Battery capacity	Ah	270
25	制动 Brake		电磁/再生 Electromagnetic /Regenerative
26	控制器 Controller		CURTIS
	重量 Weight		
27	蓄电池重量 Battery weight	kg	252
28	自重（包含蓄电池）Service weight with battery	kg	810

QYD30-460Q



产品性能特点：

驱动单元专利设计浮动机构；
电子助力转向，轻便、静音；
交流驱动电机，无碳刷、免维护；
电起升，快速、高效，标配起升限位装置；
蓄电池侧拉设计，更换便捷、高效；
交流控制器，无级调速，动力强劲，多重自动保护；
弯道自动减速功能，更安全；
锂电款采用磷酸铁锂电池，充电快，效率高。

Characteristics:

1. Patented floating mechanism design for drive unit;
2. Electric power steering, lightweight and low-noise operation;
3. AC drive motor, brushless and maintenance-free;
4. Electric lifting, fast & efficient, standard equipped with lifting limit device;
5. Side-pull storage battery design for quick, convenient replacement;
6. AC controller with stepless speed regulation, powerful output and multiple automatic protection functions;
7. Automatic corner deceleration function for enhanced safety;
8. Lithium version equipped with lithium iron phosphate battery, featuring fast charging and high effi-

QYD30-460Q

特性 Feature	单位		
型号 Model		QYD30-460Q	
操作类型 Operating type		乘驾式 Stand On	
额定牵引重量Rated traction weight	kg	3000	
额定牵引力Ratedpullingpower	N	900	
轴距 Wheel base	mm	1205	
车轮 Wheels			
轮子类型(前/后) Wheels type		PU	
驱动轮/平衡轮/承重轮数量 Wheel quantity /Driving wheel/Bearing wheel		1/2/4	
驱动轮尺寸Driving wheel size	mm	Φ248×75	
承重轮尺寸Bearing wheel size	mm	Φ84×80	
平衡轮尺寸Balancing wheel size	mm	Φ115×55	
尺寸 Dimension			
牵引挂钩最低离地高度 Minimum ground clearance of tow hook	mm	205	
最大起升高度 Max.fork lifting height	mm	355	
最大起升行程 Max.lifting height	mm	150	
整车全长 Overall length	mm	1950	
车体宽度 Overall width	mm	790	
整车高度（含手柄）Overall height(With handle)	mm	1455	
整车高度（不含手柄） Overall height(Without handle)	mm	936	
最小转弯半径Min.Turning radius	mm	1700	
性能 Performance			
最大行驶速度，满载/空载 Travel speed,laden/unladen	km/h	6/6	
爬坡度，满载/空载 Gradeability,laden/unladen	%	6/16	
电气配置 Electrical configuration			
驱动电机/起升电机/转向电机 Drive motor/ Lift motor /Steering motor	KW	AC1.5/DC2.2/DC0.3	
控制器 Controlller		ZAPI	
电池 Battery		铅酸电池Lead-acid battery	锂电池Lithium batery
蓄电池电压/容量 Battery voltage / capacity	V/Ah	24/270	24/200
充电器规格 Charger specification	V/A	24/50	24/100
蓄电池重量 Battery weight	kg	247	105
自重（包含蓄电池）Service weight with battery	kg	831	675
其他			
噪音水平 Noise level	dB(A)	≤75	
转向类型 Steering type		电子转向Electronic steering	

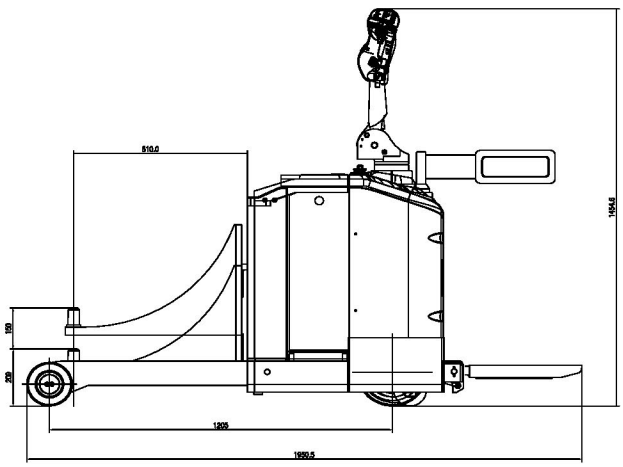

COMPANY CONTACT INFO
Website: www.e-rentals.cn
Address: 2837 Khalil Abu Al-Safa, 6976 Ar Rimal, Riyadh 13264

OPD20/25-581 (UGD)

平面拣选车
Low Level Order Pickers



产品性能特点：

- 拉杆提升，导轨垂直提升，双托盘提升。
- 标配电池侧拉设计，更便捷、高效。
- 操纵手柄自动回中位功能。
- 车身两侧点动行走设计，反馈灵敏。
- 交流控制器，无级调速，动力强劲，多重自动保护。
- 锂电款采用磷酸铁锂电池，充电快、效率高。
- 电子助力转向，轻便、静音。
- 交流驱动电机，无碳刷、免维护。
- 弯道自动减速功能，更安全。

Characteristics:

- Unique energy-saving lifting mechanism - guide rail lifting mechanism, which does not lift the battery and is more energy-saving.
- Standard battery side pull design, more convenient and efficient.
- The operation handle returns to the center position automatically.
- The jogging walking design on both sides of the truck body provides sensitive feedback.
- AC controller,stepless,strong power,multiple automatic protection.
- The LFP model lithium batteries are fast charging and efficient.
- Electronic power steering,light and low noise.
- AC driving motor without carbon brush and free maintenance.
- Curve automatic deceleration function,safer.

OPD20/25-581 (UGD)

制造商和技术参数 Manufacturer' s Data and Design Characteristics

	特性	Feature			
1.01	型号	Model		OPD20/25-581(UGD)	
1.02	操作类型	Operating type		乘驾式 Ride On	
1.03	额定载重	Load capacity	kg	2000/2500	
1.04	载荷中心距	Load center	mm	1200	
1.05	轴距	Wheel base	mm	3544	
	车轮	Wheels			
2.01	轮子类型	Wheels type		聚氨酯 PU	
2.02	驱动轮/平衡轮/承重轮数量	Wheel quantity-Driving wheel/Balance wheel /Bearing wheel		1/2/4	
2.03	驱动轮尺寸	Driving wheel size	mm	Φ248X75	
2.04	承载轮尺寸	Bearing wheel size	mm	Φ84×80	
2.05	平衡轮尺寸	Balance wheel size	mm	Φ115×55	
	尺寸	Dimension			
3.01	货叉最低离地高度	Min.fork lowered height	mm	85	
3.02	货叉最大起升高度	Max.fork lifting height	mm	205	
3.03	最大起升行程	Max.lifting height	mm	120	
3.04	货叉外侧间距	Outside width between forks	mm	650	
3.05	货叉内侧间距	Inside width between forks	mm	280	
3.06	货叉长度	Fork length	mm	2400	
3.07	货叉宽度	Fork width	mm	185	
3.08	货叉厚度	Fork thickness	mm	55	
3.09	整车全长	Overall length	mm	3922	
3.10	车体宽度	Overall width	mm	754	
3.11	整车高度(含手柄)	Overall height(With handle)	mm	1743	
3.12	最小转弯半径	Min.Turning radius	mm	3048	
3.13	最小直角堆垛通道宽度(托盘800×2400,2400沿货叉放置)	Min.Aisle width for pallets 800×1200	mm	4216	
3.14	最小直角堆垛通道宽度(托盘1000×2400,2400沿货叉放置)	Min.Aisle width for pallets 1000×2400	mm	4261	
	性能	Performance			
4.01	最大行驶速度,满载/空载	Travel speed,laden/unladen	km/h	9/12	
4.02	最大起升速度,满载/空载	Lift speed,laden/unladen	mm/s	30/35	
4.03	最大下降速度,满载/空载	Lowering speed,laden/unladen	mm/s	40/35	
4.04	爬坡度,满载/空载	Gradeability,laden/unladen	%	6/16	
4.05	制动类型	Service brake type		电磁制动 Electric	
	电气配置	Electrical configuration			
5.01	驱动电机额定功率S2 60分钟	Traction motor rating at S2 60 min	kW	AC 3	
5.02	起升电机额定功率S3 15%	Lift motor rating at S3 15%	kW	DC 2.2	
5.03	电池	Battery		铅酸电池Lead-acid battery	锂电Lithium battery (Optional)
5.04	蓄电池电压/标称容量	Battery voltage / capacity	V/Ah	24/280(24/345选配)	24/200
5.05	充电器规格	Charger specification	V/A	24/50	24/100
	重量	Weight			
6.01	蓄电池重量(±5%)	Battery weight(±5%)	kg	247	105
6.02	自重(包含蓄电池)	Service weight with battery	kg	1310	1170
	其他	Others			
7.01	噪音等级	Sound level	dB(A)	≤69	
7.02	转向类型	Steering type		电转向 Electronic	
7.03	驱动控类型	Drive control type		交流控制 AC	
7.04	控制器	Controuer		前拓 QEXPEND	

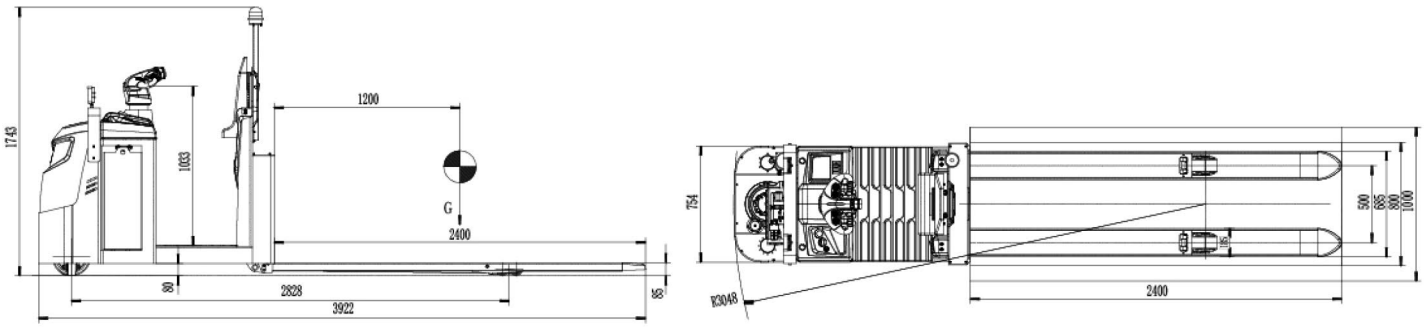

COMPANY CONTACT INFO
Website: www.e-rentals.cn
Address: 2837 Khalil Abu Al-Safa, 6976 Ar Rimal, Riyadh 13264

E-rentals

JXO-CE

平面拣选车
Low Level Order Pickers



高性能，高可靠

- 高强度结构设计;
- 低噪低故障液压站，经过多层检测测试的油缸及管路，保证了液压系统高可靠;
- 活动部分使用机器人电缆，保证活动电缆的可靠性;
- 叉车标准门架设计,10#工字钢应用，保证整体门架强度，大大提高高空稳定性。
- 20MM厚的减震吸能脚垫和齐平安装的脚踏开关让驾驶员在驾驶时可以保持自然地站姿;
- 电子转向，操纵更轻便(电转向)。

Characteristics:

- High-strength structural design;
- Low-noise & low-failure hydraulic power unit. Multi-layer inspected and tested hydraulic cylinders and pipelines ensure high reliability of the hydraulic system;
- Robotic cables are adopted for moving components to guarantee stable service life of movable cables;
- Standard forklift mast structure with No.10 I-beam for superior overall mast rigidity, greatly enhancing stability during high-lift operations.
- Equipped with 20mm thick shock-absorbing energy-absorbing foot pads and flush-mounted foot switches, enabling operators to maintain a natural standing posture during operation;
- Electric power steering delivers effortless, light steering control.

JX0-CE

制造商和技术参数 Manufacturer' s Data and Design Characteristics

1.1	型号	Model			JX0-CE	JX0-CE
1.2	动力形式	Power Type			电动 Electric	电动 Electric
1.3	操作方式	Operation Mode			拣选式 Order Picker	拣选式 Order Picker
1.4	载荷	Rated Capacity	Q	kg	90/110/136*	90/110/136*
1.5	载荷中心距	Load Center Distance	c	mm	-	-
1.6	承载长度	Load Length	x	mm	-	-
1.8	轴距	Wheelbase	y	mm	1095	1095
1.9	自重	Vehicle Weight		kg	800	800
2.1	轴载，满载前/后	Axle Load, Full Load Front/Rear		kg	673/467	673/467
2.2	轴载，空载前/后	Axle Load, No Load Front/Rear		kg	380/420	380/420
2.3	轮胎类型，驱动轮/承载轮	Wheel Type, Drive Wheel/Load Wheel			聚氨酯/橡胶PU/Rubber	聚氨酯/橡胶PU/Rubber
3.1	前轮(直径×宽度)	Front Wheel (Diameter 脳 Width)		mm	Φ210×70	Φ210×70
3.2	后轮(直径×宽度)	Rear Wheel (Diameter 脳 Width)		mm	Φ250×100	Φ250×100
3.3	平衡轮尺寸	Stabilizer Wheel Size		mm	Φ74×48	Φ74×48
3.4	驱动轮，平衡轮/承载轮数量(x=驱动轮)	Quantity of Drive Wheel / Stabilizer Wheel /		mm	1x，2/2	1x，2/2
3.5	前轮距	Front Wheel Track	b10	mm	545	545
3.6	后轮距	Rear Wheel Track	b11	mm	640	640
3.7	门架下降后的最低高度	Minimum Height of Mast When Lowered	h1	mm	1375	1375
4.2	自由起升高度	Free Lift Height	h2	mm	485	485
4.3	起升高度	Lift Height	h3	mm	3615	3615
4.4	起升最高时的门架高度	Mast Height at Maximum Lift	h4	mm	4090	4090
4.5	护顶架/驾驶舱高度	Height of Guard Cab / Driver Cabin	h6	mm	1425	1425
4.7	座椅/站台的离地高度	Floor Height of Cabin/Operator Platform	h7	mm	285	285
4.8	站台起升高度	Platform Lift Height	h12	mm	3000	3000
4.14	货叉下降后高度	Fork Height When Lowered	h13	mm	-	-
4.15	整车长度（含拖钩）	Overall Vehicle Length (Including Forks)	l1	mm	1440	1440
4.19	到货叉垂直面的长度	Length to Vertical Face of Fork Carriage	l2	mm	-	-
4.20	整车宽度	Vehicle Width	b1/b2	mm	750	750
4.21	货叉尺寸	Fork Size	s/e/l	mm	-	-
4.22	货叉外宽	Fork Outer	b5	mm	-	-
4.25	轴距中心处离地间隙	Ground Clearance at Load Center	m2	mm	35	35
4.32	直角堆垛通道宽度(托盘为 1000长×1200宽)	(Pallet 1000x1200)	Ast	mm	-	-
4.34.1	直角堆垛通道宽度(托盘为800宽×1200长)	(Pallet 800x1200)	Ast	mm	-	-
4.34.2	转弯半径	Turning Radius Wa	Wa	mm	1260	1260
4.35	行驶速度，满载/空载	Travel Speed, Full Load / No Load		km/h	6/6.5	6/6.5
5.1	起升速度，满载/空载	Lifting Speed, Full Load / No Load		m/s	0.22/0.27	0.22/0.27
5.2	下降速度，满载/空载	Lowering Speed, Full Load / No Load		m/s	0.31/0.25	0.31/0.25
5.3	最大爬坡度，满载/空载	Maximum Gradeability, Full Load / No Load		%	5/8	5/8
5.8	行驶制动	Drive System			电磁 Electromagnetic	电磁 Electromagnetic
5.10	驱动电机额定功率S2 60分钟	Rated Power of Drive Motor S2 60min		kW	0.65	0.65
6.1	起升电机额定功率S3 15%	Rated Power of Lift Motor S3 15%		kW	2.2	2.2
6.2	电瓶电压/标称容量	Battery Voltage / Rated Capacity		V/Ah	24V/135(Li)	24V/120
6.4	电瓶重量	Battery Weight		kg	50	77
6.5	驱动单元类型	Drive Unit Type			直流DC	直流DC
8.1	转向类型	Steering Type			电子 Electronic	电子 Electronic
10.5	噪音等级S	Noise Level S		dB(A)	60	60

二维线图
LINE GRAPH

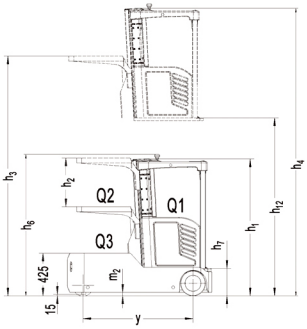

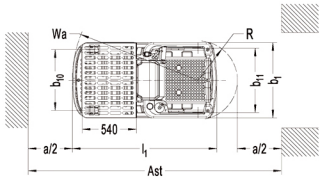

COMPANY CONTACT INFO
Website: www.e-rentals.cn
Address: 2837 Khalil Abu Al-Safa, 6976 Ar Rimal, Riyadh 13264

E-rentals

SDYY-BYC

手动液压搬运车
Manual Hydraulic Pallet Truck



高效便捷

- 采用加厚钢板，承重稳固不易变形。
- 一体式低噪液压泵站，密封性能优异，升降顺畅无渗漏，故障率低，使用寿命长。
- 人体工学操作手柄，推拉省力，升降摇杆切换轻便，轻松完成货物装卸转运。
- 耐磨聚氨酯/尼龙滚轮，推行顺滑、转弯灵活狭小通道也能轻松通行。
- 升降平稳缓冲设计，起升缓慢不冲击托盘避免货物磕碰损坏。
- 自重轻便、结构紧凑，存放不占空间，仓库、商超、车间通用。

Characteristics:

- Frame made of thickened steel plate, stable load bearing and anti-deformation under long-term heavy load.
- Integrated low-noise hydraulic power unit with reliable sealing. Smooth lifting without oil leakage, low failure rate and long service life.
- Ergonomic handle for labor-free pushing and pulling. Light-duty lift lever enables single-person efficient cargo handling.
- Wear-resistant PU/nylon wheels deliver smooth, silent rolling and flexible steering, ideal for narrow aisle operation.
- Buffered stable lifting system with slow hoisting to avoid pallet impact and cargo damage.
- Lightweight and compact body, space-saving for storage, suitable for warehouses, workshops and supermarkets.

SDYY-BYC

制造商和技术参数 Manufacturer' s Data and Design Characteristics

常规标准款 Standard Regular Models Parameters

参数项目	Parameter Item	2吨标准款 (2 Ton Standard Model)	2.5吨标准款 (2.5 TonStandard Model)	3吨重型款 (3 TonStandard Model)	5吨重型款 (5 TonStandard Model)
额定载重	Rated Load Capacity	2000kg	2500kg	3000kg	5000kg
货叉最低高度	Minimum Fork Height	85mm	85mm	85mm	90mm
最大起升高度	Maximum Lifting Height	200mm	200mm	200mm	200mm
标准货叉长度	Standard Fork Length	1150mm	1150mm	1220mm	1220mm
货叉外宽（窄/宽）	Overall Fork Width	550mm / 685mm	550mm / 685mm	550mm / 685mm	550mm / 685mm
单叉宽度	Single Fork Width	160mm	160mm	160mm	210mm
整车总长	Overall Vehicle Length	1550mm	1550mm	1620mm	1620mm
整车自重	Overall Vehicle Weight	65–70kg	72–78kg	85–92kg	140–200kg
标配轮组	Standard Wheel Set	PU聚氨酯轮 (Polyurethane Wheels)	PU聚氨酯轮 (Polyurethane Wheels)	加厚PU轮 (Reinforced PU Wheels)	加厚PU轮 (Reinforced PU Wheels)
液压配置	Hydraulic Configuration	一体铸造油缸 One-piece Casting Oil Cylinder	加粗油缸 Reinforced Oil Cylinder	加厚重载油缸 Reinforced Heavy-duty Oil Cylinder	加厚重载油缸 Reinforced Heavy-duty Oil Cylinder

特殊定制款 Special Customized Models Parameters

参数项目	Parameter Item	超低放款(2t) Ultra-low Profile Model (2t)	加长货叉款(2t) Extended Fork Model (2t)	304不锈钢款(2t) 304 Stainless Steel Model (2t)
额定载重	Rated Load Capacity	2000kg	1500–2000kg	2000kg
货叉最低高度	Minimum Fork Height	51mm	85mm	85mm
最大起升高度	Maximum Lifting Height	150mm	200mm	200mm
货叉长度	Standard Fork Length	1150mm	1500/1800mm	1150mm
货叉外宽	Overall Fork Width	550/685mm	550mm	550/685mm
适用场景	Applicable Scenarios	低位托盘、仓储货架 Low-profile pallets, warehouse racks	超长货物、长托盘 Over-length goods, long pallets	食品厂、化工、防潮防锈环境 moisture-proof & rust-proof environments

通用统一技术参数 General Unified Technical Parameters

通用项目	General Item	标准参数	Standard Parameter
转向角度	Steering Angle	180°	180°
操作手柄	Operating Handle	三位式（升/停/降）	3-position (Lift/Stop/Lower)
保养用油	Maintenance Oil	46#抗磨液压油	46# Anti-wear Hydraulic Oil
安全装置	Safety Device	过载泄压、缓冲下降	Overload pressure relief, buffer lowering
适配托盘	Compatible Pallets	国标1200×1000、1100×1100托盘	National standard 1200×1000, 1100×1100 pallets
适用地面	Applicable Floors	水泥地、环氧地坪、平整瓷砖	Cement floor, epoxy floor, flat ceramic tile

COMPANY CONTACT INFO
Website: www.e-rentals.cn
Address: 2837 Khalil Abu Al-Safa, 6976 Ar Rimal, Riyadh 13264

COMPANY NETWORK



E-rentals
INDUSTRIAL EQUIPMENT

COMPANY CONTACT INFO

Tel:

Website: www.e-rentals.cn

Address: 2837 Khalil Abu Al-Safa, 6976 Ar Rimal, Riyadh 13264